NASA/SP—2008-7039/SUPPL69
October 2008

NASA PATENT ABSTRACTS BIBLIOGRAPHY

A CONTINUING BIBLIOGRAPHY

National Aeronautics and
Space Administration
Langley Research Center

**Scientific and Technical
Information Program Office**

NASA STI Program ... in Profile

Since its founding, NASA has been dedicated to the advancement of aeronautics and space science. The NASA scientific and technical information (STI) program plays a key part in helping NASA maintain this important role.

The NASA STI program operates under the auspices of the Agency Chief Information Officer. It collects, organizes, provides for archiving, and disseminates NASA's STI. The NASA STI program provides access to the NASA Aeronautics and Space Database and its public interface, the NASA Technical Report Server, thus providing one of the largest collections of aeronautical and space science STI in the world. Results are published in both non-NASA channels and by NASA in the NASA STI Report Series, which includes the following report types:

- TECHNICAL PUBLICATION. Reports of completed research or a major significant phase of research that present the results of NASA Programs and include extensive data or theoretical analysis. Includes compilations of significant scientific and technical data and information deemed to be of continuing reference value. NASA counterpart of peer-reviewed formal professional papers but has less stringent limitations on manuscript length and extent of graphic presentations.

- TECHNICAL MEMORANDUM. Scientific and technical findings that are preliminary or of specialized interest, e.g., quick release reports, working papers, and bibliographies that contain minimal annotation. Does not contain extensive analysis.

- CONTRACTOR REPORT. Scientific and technical findings by NASA-sponsored contractors and grantees.

- CONFERENCE PUBLICATION. Collected papers from scientific and technical conferences, symposia, seminars, or other meetings sponsored or co-sponsored by NASA.

- SPECIAL PUBLICATION. Scientific, technical, or historical information from NASA programs, projects, and missions, often concerned with subjects having substantial public interest.

- TECHNICAL TRANSLATION. English-language translations of foreign scientific and technical material pertinent to NASA's mission.

Specialized services also include creating custom thesauri, building customized databases, and organizing and publishing research results.

For more information about the NASA STI program, see the following:

- Access the NASA STI program home page at *http://www.sti.nasa.gov*

- E-mail your question via the Internet to *help@sti.nasa.gov*

- Fax your question to the NASA STI Help Desk at 443-757-5803

- Phone the NASA STI Help Desk at 443-757-5802

- Write to:
  NASA STI Help Desk
  NASA Center for AeroSpace Information
  7115 Standard Drive
  Hanover, MD 21076-1320

Introduction

Several thousand inventions result each year from research supported by the National Aeronautics and Space Administration. NASA seeks patent protection on inventions to which it has title if the invention has important use in government programs or significant commercial potential. These inventions cover a broad range of technologies and include many that have useful and valuable commercial application.

NASA inventions best serve the interests of the United States when their benefits are available to the public. In many instances, the granting of nonexclusive or exclusive licenses for the practice of these inventions may assist in the accomplishment of this objective. This bibliography is published as a service to companies, firms, and individuals seeking new, licensable products for the commercial market.

The NASA *Patent Abstracts Bibliography* is an annual NASA publication containing comprehensive abstracts of NASA-owned inventions covered by U.S. patents. The citations included were originally published in NASA's *Scientific and Technical Aerospace Reports (STAR)*.

The citations published in this issue cover the period October 2007 through September 2008. The subjects covered include the *NASA Scope and Subject Category Guide's* 10 broad subject divisions separated further into 76 specific categories. However, not all categories contain citations during the date range of this issue; therefore, the Table of Contents does not include all divisions and categories. Each citation includes an abstract and, when available, a key illustration taken from the patent or application for patent. Also when available, citations include a link to the full-text document online.

Patent Availability

Information on obtaining copies of NASA patents

Licenses for Commercial Use

Information on obtaining a license to use a NASA patented invention

Address of NASA Patent Counsels

Addresses for the NASA center patent counsels having knowledge of inventions

Patent Licensing Regulations

Information about the policies and procedures for licensing federally owned inventions in the custody of the National Aeronautics and Space Administration. Regulations on the licensing of government owned inventions are available at: http://www.access.gpo.gov/cgi-bin/cfrassemble.cgi?title=200837.

The Federal Depository Library Program

The U.S. Congress established the Federal Depository Library Program (FDLP) to ensure access by the American public to U.S. Government information. The program acquires and disseminates information products from all 3 branches of the U.S. Government to over 1,200 Federal depository libraries nationwide. The libraries maintain these information products as part of their existing collections and are responsible for assuring that the public has free access to the information. Locate the Federal depository libraries at: http://www.gpoaccess.gov/libraries.html.

Table of Contents

Subject Divisions/Categories

Document citations are grouped by division and then by category, according to the *NASA Scope and Coverage Category Guide.*

Aeronautics

01 Aeronautics (General) 1
03 Air Transportation and Safety 2
04 Aircraft Communications and Navigation 3
05 Aircraft Design, Testing and Performance 3
06 Avionics and Aircraft Instrumentation 4
07 Aircraft Propulsion and Power 5
08 Aircraft Stability and Control 6

Astronautics

12 Astronautics (General) 7
14 Ground Support Systems and Facilities (Space) 8
17 Space Communications, Spacecraft Communications, Command and Tracking 9

Chemistry and Materials

23 Chemistry and Materials (General) 9
24 Composite Materials 11
25 Inorganic, Organic and Physical Chemistry 15
26 Metals and Metallic Materials 19
27 Nonmetallic Materials 21
28 Propellants and Fuels 23

Engineering

31 Engineering (General) 23
32 Communications and Radar 25
33 Electronics and Electrical Engineering 29
34 Fluid Mechanics and Thermodynamics 42
35 Instrumentation and Photography 44
36 Lasers and Masers 49
37 Mechanical Engineering 50
38 Quality Assurance and Reliability 56
39 Structural Mechanics 56

Geosciences

43 Earth Resources and Remote Sensing 57
44 Energy Production and Conversion 57
45 Environment Pollution 58

Life Sciences

51 Life Sciences (General) 59
54 Man/System Technology and Life Support 63

Mathematical and Computer Sciences

59 Mathematical and Computer Sciences (General) 64
60 Computer Operations and Hardware 65
61 Computer Programming and Software 65
62 Computer Systems 66
63 Cybernetics, Artificial Intelligence and Robotics 67
66 Systems Analysis and Operations Research 68

Physics

70 Physics (General) 69
71 Acoustics 69
72 Atomic and Molecular Physics 70
74 Optics 70
75 Plasma Physics 77
76 Solid-State Physics 77
77 Physics of Elementary Particles and Fields 79

Social and Information Sciences

82 Documentation and Information Science 80

Indexes

Two indexes are available. You may use the find command under the tools menu while viewing the PDF file for direct match searching on any text string. You may also select either of the two indexes provided for linking to the corresponding document citation from *NASA Thesaurus* terms and personal author names.

Subject Term Index

Personal Author Index

NASA PATENT ABSTRACTS BIBLIOGRAPHY

A Continuing Bibliography (Suppl. 69)

OCTOBER 2008

01
AERONAUTICS (GENERAL)

Includes general research topics related to manned and unmanned aircraft and the problems of flight within the Earth's atmosphere. Also includes manufacturing, maintenance, and repair of aircraft. For specific topics in aeronautics, see categories 02 through 09. For information related to space vehicles see 12 Astronautics.

20080009511 NASA, Washington, DC USA

Nonsurvivable momentum exchange system

Roder, Russell, Inventor; Ahronovich, Eliezer, Inventor; Davis, III, Milton C., Inventor; November 6, 2007; 8 pp.; In English

Patent Info.: Filed September 29, 2005; US-Patent-7,290,737; US-Patent-Appl-SN-11/251,537; No Copyright; Avail: CASI; A02, Hardcopy

ONLINE: http://hdl.handle.net/2060/20080009511

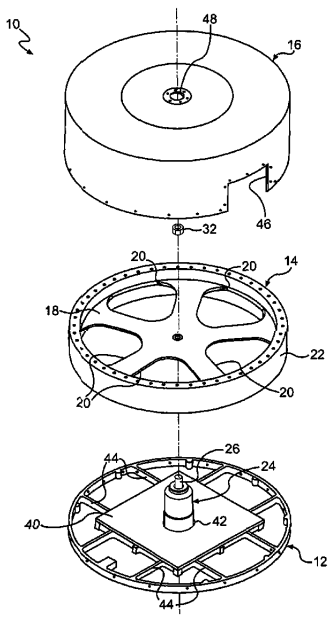

A demiseable momentum exchange system includes a base and a flywheel rotatably supported on the base. The flywheel includes a web portion defining a plurality of web openings and a rim portion. The momentum exchange system further includes a motor for driving the flywheel and a cover for engaging the base to substantially enclose the flywheel. The system may also include components having a melting temperature below 1500 degrees Celsius. The momentum exchange system is configured to demise on reentry.

Official Gazette of the U.S. Patent and Trademark Office

Flywheels; Momentum

20080009516 NASA, Washington, DC USA

Method and associated apparatus for capturing, servicing and de-orbiting earth satellites using robotics

Cepollina, Frank J., Inventor; Burns, Richard D., Inventor; Holz, Jill M., Inventor; Corbo, James E., Inventor; Jedhrich, Nicholas M., Inventor; July 10, 2007; 48 pp.; In English

Patent Info.: Filed May 6, 2005; US-Patent-7,240,879; US-Patent-Appl-SN-11/124,592; No Copyright; Avail: CASI; A03, Hardcopy

ONLINE: http://hdl.handle.net/2060/20080009516

This invention is a method and supporting apparatus for autonomously capturing, servicing and de-orbiting a free-flying spacecraft, such as a satellite, using robotics. The capture of the spacecraft includes the steps of optically seeking and ranging the satellite using LIDAR; and matching tumble rates, rendezvousing and berthing with the satellite. Servicing of the spacecraft may be done using supervised autonomy, which is allowing a robot to execute a sequence of instructions without intervention from a remote human-occupied location. These instructions may be packaged at the remote station in a script and uplinked to the robot for execution upon remote command giving authority to proceed. Alternately, the instructions may be generated by Artificial Intelligence (AI) logic onboard the robot. In either case, the remote operator maintains the ability to abort an instruction or script at any time, as well as the ability to intervene using manual override to teleoperate the robot.In one embodiment, a vehicle used for carrying out the method of this invention comprises an ejection module, which includes the robot, and a de-orbit module. Once servicing is completed by the robot, the ejection module separates from the de-orbit module, leaving the de-orbit module attached to the satellite for de-orbiting the same at a future time. Upon separation, the ejection module can either de-orbit itself or rendezvous with another satellite for servicing. The ability to de-orbit a spacecraft

further allows the opportunity to direct the landing of the spent satellite in a safe location away from population centers, such as the ocean.
Official Gazette of the U.S. Patent and Trademark Office
Robotics; Ejection; Satellites

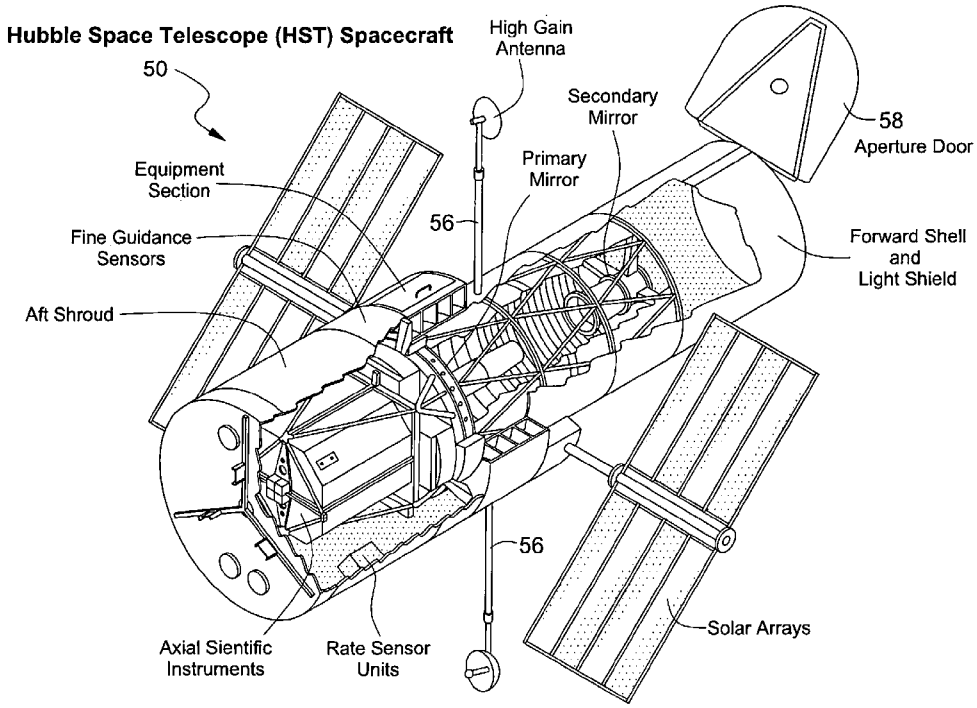

03
AIR TRANSPORTATION AND SAFETY

Includes passenger and cargo air transport operations; airport ground operations; flight safety and hazards; and aircraft accidents. Systems and hardware specific to ground operations of aircraft and to airport construction are covered in 09 Research and Support Facilities (Air). Air traffic control is covered in 04 Aircraft Communications and Navigation. For related information see also 16 Space Transportation and Safety and 85 Technology Utilization and Surface Transportation.

20080009429 City Univ. of New York, NY USA
Methods and systems for detection of ice formation on surfaces
Alfano, Robert R., Inventor; Wang, Wubao, Inventor; Sztul, Henry, Inventor; Budansky, Yury, Inventor; December 25, 2007; 13 pp.; In English
Contract(s)/Grant(s): NCC1-03009; Patent Info.: Filed December 15, 2005; US-Patent-7,312,713; US-Patent-Appl-SN-11/303,190; No Copyright; Avail: CASI; A03, Hardcopy
ONLINE: http://hdl.handle.net/2060/20080009429

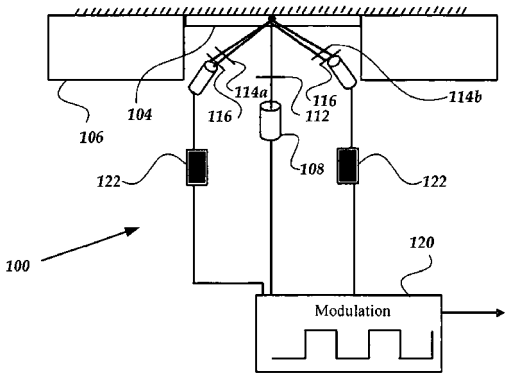

A system for detecting ice formation on metal, painted metal and other material surfaces can include a transparent window having an exterior surface upon which ice can form; a light source and optics configured and arranged to illuminate the exterior surface of the window from behind the exterior surface; and a detector and optics configured and arranged to receive light backscattered by the exterior surface and any ice disposed on the exterior surface and determine the thickness of the ice layer. For example, the system can be used with aircraft by placing one or more windows in the wings of the aircraft. The system is used for a novel optical method for real-time on-board detection and warning of ice formation on surfaces of airplanes, unmanned aerial vehicles (UAVs), and other vehicles and stationary structures to improve their safety and operation.
Official Gazette of the U.S. Patent and Trademark Office
Detection; Ice Formation; Aircraft; Aircraft Safety

04
AIRCRAFT COMMUNICATIONS AND NAVIGATION

Includes all modes of communication with and between aircraft; air navigation systems (satellite and ground based); and air traffic control. For related information see also 06 Avionics and Aircraft Instrumentation; 17 Space Communications, Spacecraft Communications, Command and Tracking; and 32 Communications and Radar.

20080009428 NASA, Washington, DC USA
Delay banking for air traffic management
Green, Steven M., Inventor; December 25, 2007; 13 pp.; In English
Patent Info.: Filed February 1, 2005; US-Patent-7,313,475; US-Patent-Appl-SN-11/053,713; No Copyright; Avail: CASI; A03, Hardcopy
ONLINE: http://hdl.handle.net/2060/20080009428

A method and associated system for time delay banking for aircraft arrival time, aircraft departure time and/or en route flight position. The delay credit value for a given flight may decrease with passage of time and may be transferred to or traded with other flights having the same or a different user (airline owner or operator). The delay credit value for a given aircraft flight depends upon an initial delay credit value, which is determined by a central system and depends upon one or more other flight characteristics. Optionally, the delay credit value decreases with passage of time. Optionally, a transaction cost is assessed against a delay credit value that is used on behalf of another flight with the same user or is traded with a different user.
Official Gazette of the U.S. Patent and Trademark Office
Air Traffic Control; Time Lag

05
AIRCRAFT DESIGN, TESTING AND PERFORMANCE

Includes all stages of design of aircraft and aircraft structures and systems. Also includes aircraft testing, performance and evaluation, and aircraft and flight simulation technology. For related information see also 18 Spacecraft Design, Testing and Performance and 39 Structural Mechanics. For land transportation vehicles see 85 Technology Utilization and Surface Transportation.

20080008716 Boeing Co., Chicago, IL USA
System and method for improved rotor tip performance
Bussom, Richard, Inventor; McVeigh, Michael A., Inventor; Narducci, Robert P., Inventor; Zientek, Thomas A., Inventor; September 4, 2007; 13 pp.; In English
Contract(s)/Grant(s): NCC2-9019; Patent Info.: Filed July 23, 2004; US-Patent-7,264,200; US-Patent-Appl-SN-10/898,698; No Copyright; Avail: CASI; A03, Hardcopy
ONLINE: http://hdl.handle.net/2060/20080008716

The present invention discloses systems and methods for the performance enhancement of rotary wing aircraft through reduced torque, noise and vibration. In one embodiment, a system includes a sail having an aerodynamic shape positioned proximate to a tip of the rotor blade. An actuator may be configured to rotate the sail relative to the blade tip. a A control system receives information from a rotorcraft system and commands the actuator to rotate the sail to a predetermined favorable rotor blade operating condition. In another embodiment, a method includes configuring the rotorcraft in a selected flight condition, communicating input signals to a control system operable to position sails coupled to tips of blades of a rotor assembly, processing the input signals according to a constraint condition to generate sail positional information, and transferring the sail positional information to the sail.
Official Gazette of the U.S. Patent and Trademark Office
Rotary Wing Aircraft; Rotors; Torque; Vibration; Noise Reduction; Sails

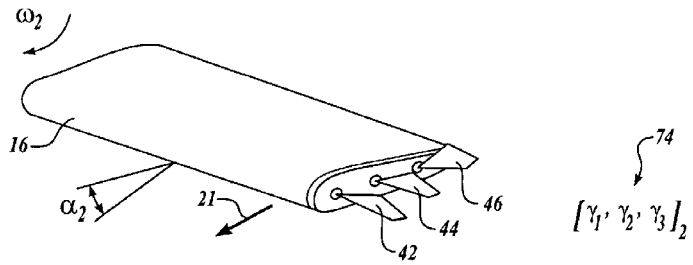

20080008721 Aerospace Computing, Inc., Mountain View, CA USA
Dividers for reduction of aerodynamic drag of vehicles with open cavities
Storms, Bruce L., Inventor; August 28, 2007; 12 pp.; In English
Contract(s)/Grant(s): NAS2-03144; Patent Info.: Filed April 1, 2005; US-Patent-7,261,353; US-Patent-Appl-SN-11/097,052; No Copyright; Avail: CASI; A03, Hardcopy
ONLINE: http://hdl.handle.net/2060/20080008721

A drag-reduction concept for vehicles with open cavities includes dividing a cavity into smaller adjacent cavities through installation of one or more vertical dividers. The dividers may extend the full depth of the cavity or only partial depth. In either application, the top of the dividers are typically flush with the top of the bed or cargo bay of the vehicle. The dividers may be of any material, but are strong enough for both wind loads and forces encountered during cargo loading/unloading. For partial depth dividers, a structural angle may be desired to increase strength.
Official Gazette of the U.S. Patent and Trademark Office
Aerodynamic Drag; Cavities; Dividers; Drag Reduction

06
AVIONICS AND AIRCRAFT INSTRUMENTATION

Includes all avionics systems, cockpit and cabin display devices, and flight instruments intended for use in aircraft. For related information see also 04 Aircraft Communications and Navigation; 08 Aircraft Stability and Control; 19 Spacecraft Instrumentation and Astrionics; and 35 Instrumentation and Photography.

20080009626 NASA, Washington, DC USA
Method and apparatus for loss of control inhibitor systems
A'Harrah, Ralph C., Inventor; October 23, 2007; 11 pp.; In English
Patent Info.: Filed July 20, 2005; US-Patent-7,285,933; US-Patent-Appl-SN-11/188,227; No Copyright; Avail: CASI; A03, Hardcopy
ONLINE: http://hdl.handle.net/2060/20080009626

Active and adaptive systems and methods to prevent loss of control incidents by providing tactile feedback to a vehicle operator are disclosed. According to the present invention, an operator gives a control input to an inceptor. An inceptor sensor measures an inceptor input value of the control input. The inceptor input is used as an input to a Steady-State Inceptor Input/Effector Output Model that models the vehicle control system design. A desired effector output from the inceptor input is generated from the model. The desired effector output is compared to an actual effector output to get a distortion metric. A feedback force is generated as a function of the distortion metric. The feedback force is used as an input to a feedback force generator which generates a loss of control inhibitor system (LOCIS) force back to the inceptor. The LOCIS force is felt by the operator through the inceptor.
Official Gazette of the U.S. Patent and Trademark Office
Man Machine Systems; Aircraft Control; Feedback; Sensors; Control Equipment

20080009627 NASA, Washington, DC USA
Method and apparatus for loss of control inhibitor systems
A'Harrah, Ralph C., Inventor; October 23, 2007; 8 pp.; In English
Patent Info.: Filed October 27, 2004; US-Patent-7,285,932; US-Patent-Appl-SN-10/975,119; No Copyright; Avail: CASI; A02, Hardcopy
ONLINE: http://hdl.handle.net/2060/20080009627

Active and adaptive systems and methods to prevent loss of control incidents by providing tactile feedback to a vehicle operator are disclosed. According to the present invention, an operator gives a control input to an inceptor. An inceptor sensor measures an inceptor input value of the control input. The inceptor input is used as an input to a Steady-State Inceptor Input/Effector Output Model that models the vehicle control system design. A desired effector output from the inceptor input is generated from the model. The desired effector output is compared to an actual effector output to get a distortion metric. A feedback force is generated as a function of the distortion metric. The feedback force is used as an input to a feedback force generator which generates a loss of control inhibitor system (LOCIS) force back to the inceptor. The LOCIS force is felt by the operator through the inceptor.
Official Gazette of the U.S. Patent and Trademark Office
Man Machine Systems; Feedback; Aircraft Control; Sensors; Control Equipment

07
AIRCRAFT PROPULSION AND POWER

Includes primary propulsion systems and related systems and components, e.g., gas turbine engines, compressors, and fuel systems; and onboard auxiliary power plants for aircraft. For related information see also 20 Spacecraft Propulsion and Power; 28 Propellants and Fuels; and 44 Energy Production and Conversion.

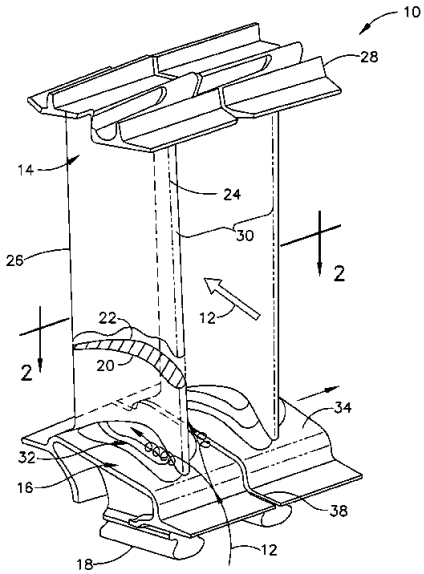

20080009482 General Electric Co., Schenectady, NY USA

Crescentic ramp turbine stage

Lee, Ching-Pang, Inventor; Tam, Anna, Inventor; Kirtley, Kevin Richard, Inventor; Lamson, Scott Henry, Inventor; May 22, 2007; 17 pp.; In English

Contract(s)/Grant(s): NAS3-01135; Patent Info.: Filed April 14, 2005; US-Patent-7,220,100; US-Patent-Appl-SN-11/106,198; No Copyright; Avail: CASI; A03, Hardcopy

ONLINE: http://hdl.handle.net/2060/20080009482

A turbine stage includes a row of airfoils joined to corresponding platforms to define flow passages therebetween. Each airfoil includes opposite pressure and suction sides and extends in chord between opposite leading and trailing edges. Each platform includes a crescentic ramp increasing in height from the leading and trailing edges toward the midchord of the airfoil along the pressure side thereof.

Official Gazette of the U.S. Patent and Trademark Office

Airfoils; Gas Turbine Engines; Ramps

20080009639 United Technologies Corp., East Hartford, CT USA

Bootstrap data methodology for sequential hybrid model building

Volponi, Allan J., Inventor; Brotherton, Thomas, Inventor; October 2, 2007; 11 pp.; In English

Contract(s)/Grant(s): NAS4-02038; Patent Info.: Filed August 26, 2004; US-Patent-7,277,838; US-Patent-Appl-SN-10/926,760; No Copyright; Avail: CASI; A03, Hardcopy

ONLINE: http://hdl.handle.net/2060/20080009639

A method for modeling engine operation comprising the steps of: 1. collecting a first plurality of sensory data, 2. partitioning a flight envelope into a plurality of sub-regions, 3. assigning the first plurality of sensory data into the plurality of sub-regions, 4. generating an empirical model of at least one of the plurality of sub-regions, 5. generating a statistical summary model for at least one of the plurality of sub-regions, 6. collecting an additional plurality of sensory data, 7. partitioning the second plurality of sensory data into the plurality of sub-regions, 8. generating a plurality of pseudo-data using the empirical model, and 9. concatenating the plurality of pseudo-data and the additional plurality of sensory data to generate an updated empirical model and an updated statistical summary model for at least one of the plurality of sub-regions.

Official Gazette of the U.S. Patent and Trademark Office

Models; Aircraft Engines; Performance Prediction

20080020317 NASA, Washington, DC USA

Low-noise fan exit guide vanes

Jones, Michael G., Inventor; Parrott, Tony L., Inventor; Heidelberg, Laurence J., Inventor; Envia, Edmane, Inventor; February 26, 2008; 7 pp.; In English

Patent Info.: Filed December 6, 2004; US-Patent-7,334,998; US-Patent-Appl-SN-11/005,624; No Copyright; Avail: CASI; A02, Hardcopy

ONLINE: http://hdl.handle.net/2060/20080020317

Low-noise fan exit guide vanes are disclosed. According to the present invention a fan exit guide vane has an outer shell substantially shaped as an airfoil and defining an interior cavity. A porous portion of the outer shell allows communication between the fluctuations in the air passing over the guide vane and the interior cavity. At least one acoustically resonant chamber is located within the interior cavity. The resonant chamber is in communication with the porous portion of the outer perimeter. The resonant chamber is configured to reduce the noise generated at a predetermined frequency. In various preferred embodiments, there is a plurality of acoustically resonant chambers located within the interior cavity. The resonant chambers

can be separated by one or more partitions within the interior cavity. In these embodiments, the resonant chambers can be configured to reduce the noise generated over a range of predetermined frequencies.
Official Gazette of the U.S. Patent and Trademark Office
Guide Vanes; Low Noise; Noise Reduction

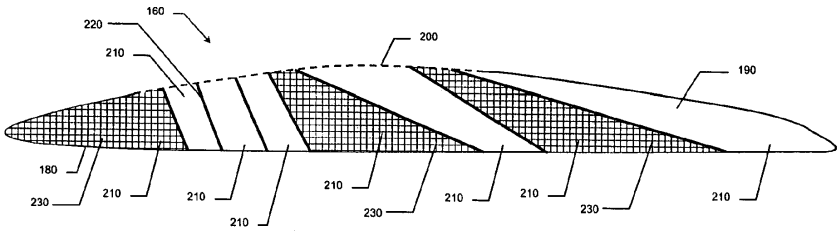

08
AIRCRAFT STABILITY AND CONTROL

Includes flight dynamics, aircraft handling qualities, piloting, flight controls, and autopilots. For related information see also 05 Aircraft Design, Testing and Performance; and 06 Avionics and Aircraft Instrumentation.

20080009475 General Electric Co., Niskayuna, NY USA
Short range RF communication for jet engine control
Sexton, Daniel White, Inventor; Hershey, John Erik, Inventor; June 26, 2007; 16 pp.; In English
Contract(s)/Grant(s): NAS3-27720; Patent Info.: Filed February 26, 2002; US-Patent-7,236,503; US-Patent-Appl-SN-10/082,382; No Copyright; Avail: CASI; A03, Hardcopy
ONLINE: http://hdl.handle.net/2060/20080009475

A method transmitting a message over at least one of a plurality of radio frequency (RF) channels of an RF communications network is provided. The method comprises the steps of detecting a presence of jamming pulses in the at least one of the plurality of RF channels. The characteristics of the jamming pulses in the at least one of the plurality of RF channels is determined wherein the determined characteristics define at least interstices between the jamming pulses. The message is transmitted over the at least one of the plurality of RF channels wherein the message is transmitted within the interstices of the jamming pulse determined from the step of determining characteristics of the jamming pulses.
Official Gazette of the U.S. Patent and Trademark Office
Communication Equipment; Communication Networks; Engine Control; Jet Engines; Radio Communication; Radio Frequencies; Jamming

20080009492 AeroVironment, Inc., Monrovia, CA USA
Aircraft control system
Lisoski, Derek L., Inventor; Kendall, Greg T., Inventor; April 3, 2007; 43 pp.; In English
Patent Info.: Filed December 5, 2002; US-Patent-7,198,225; US-Patent-Appl-SN-10/310,415; No Copyright; Avail: CASI; A03, Hardcopy
ONLINE: http://hdl.handle.net/2060/20080009492

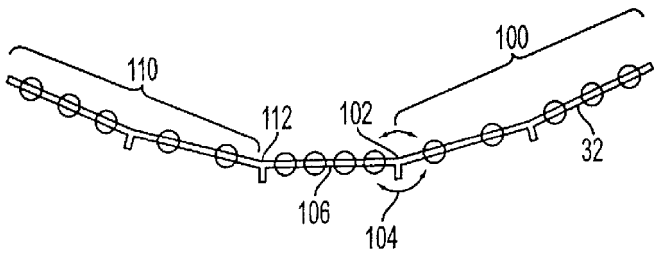

A solar rechargeable, long-duration, span-loaded flying wing, having no fuselage or rudder. Having a two-hundred foot wingspan that mounts photovoltaic cells on most all of the wing's top surface, the aircraft uses only differential thrust of its eight propellers to turn, pitch and yaw. The wing is configured to deform under flight loads to position the propellers such that the control can be achieved. Each of five segments of the wing has one or more motors and photovoltaic arrays, and produces its own lift independent of the other segments, to avoid loading them. Five two-sided photovoltaic arrays, in all, are mounted on the wing, and receive photovoltaic energy both incident on top of the wing, and which is incident also from below, through a bottom, transparent surface.
Official Gazette of the U.S. Patent and Trademark Office
Aircraft Control; Control Systems Design; Wings; Solar Arrays

12
ASTRONAUTICS (GENERAL)

Includes general research topics related to space flight and manned and unmanned space vehicles, platforms or objects launched into, or assembled in, outer space; and related components and equipment. Also includes manufacturing and maintenance of such vehicles or platforms. For specific topics in astronautics see *categories 13 through 20*. For extraterrestrial exploration see *91 Lunar and Planetary Science and Exploration*.

20080009519 Johns Hopkins Univ., Baltimore, MD USA
Method for deploying multiple spacecraft
Sharer, Peter J., Inventor; May 22, 2007; 23 pp.; In English
Contract(s)/Grant(s): NAS5-97271; Patent Info.: Filed July 6, 2004; US-Patent-7,219,858; US-Patent-Appl-SN-10/884,901; No Copyright; Avail: CASI; A03, Hardcopy
ONLINE: http://hdl.handle.net/2060/20080009519

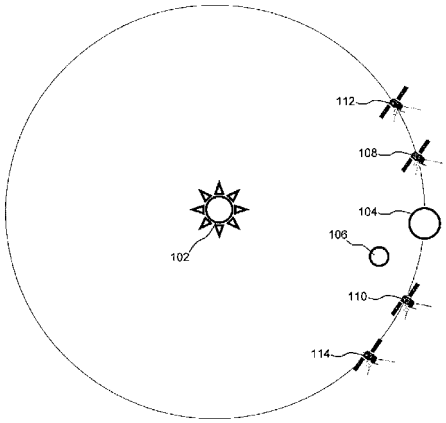

A method for deploying multiple spacecraft is disclosed. The method can be used in a situation where a first celestial body is being orbited by a second celestial body. The spacecraft are loaded onto a single spaceship that contains the multiple spacecraft and the spacecraft is launched from the second celestial body towards a third celestial body. The spacecraft are separated from each other while in route to the third celestial body. Each of the spacecraft is then subjected to the gravitational field of the third celestial body and each of the spacecraft assumes a different, independent orbit about the first celestial body. In those situations where the spacecraft are launched from Earth, the Sun can act as the first celestial body, the Earth can act as the second celestial body and the Moon can act as the third celestial body.
Official Gazette of the U.S. Patent and Trademark Office
Spacecraft Orbits; Orbital Mechanics; Deployment

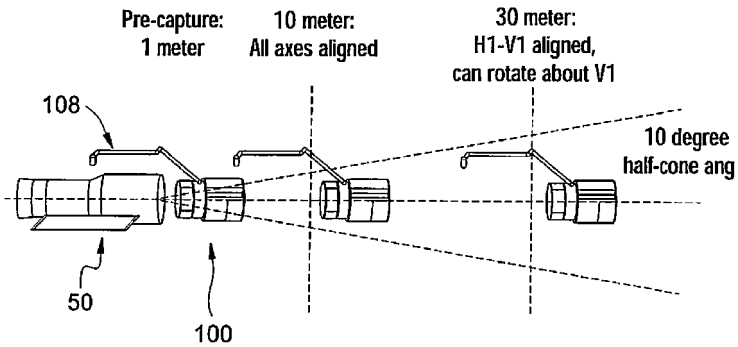

20080009621 NASA, Washington, DC USA
Method and associated apparatus for capturing, servicing, and de-orbiting earth satellites using robotics
Cepollina, Frank J., Inventor; Burns, Richard D., Inventor; Holz, Jill M., Inventor; Corbo, James E., Inventor; Jedhrich, Nicholas M., Inventor; November 13, 2007; 48 pp.; In English
Patent Info.: Filed February 1, 2007; US-Patent-7,293,743; US-Patent-Appl-SN-11/670,270; No Copyright; Avail: CASI; A03, Hardcopy
ONLINE: http://hdl.handle.net/2060/20080009621

This invention is a method and supporting apparatus for autonomously capturing, servicing and de-orbiting a free-flying spacecraft, such as a satellite, using robotics. The capture of the spacecraft includes the steps of optically seeking and ranging the satellite using LIDAR; and matching tumble rates, rendezvousing and berthing with the satellite. Servicing of the spacecraft may be done using supervised autonomy, which is allowing a robot to execute a sequence of instructions without intervention from a remote human-occupied location. These instructions may be packaged at the remote station in a script and uplinked to the robot for execution upon remote command giving authority to proceed. Alternately, the instructions may be generated by Artificial Intelligence (AI) logic onboard the robot. In either case, the remote operator maintains the ability to abort an instruction or script at any time, as well as the ability to intervene using manual override to teleoperate the robot.In one embodiment, a vehicle used for carrying out the method of this invention comprises an ejection module, which includes the robot, and a de-orbit module. Once servicing is completed by the robot, the ejection module separates from the de-orbit module, leaving the de-orbit module attached to the satellite for de-orbiting the same at a future time. Upon separation, the ejection module can either de-orbit itself or rendezvous with another satellite for servicing. The ability to de-orbit a spacecraft further allows the opportunity to direct the landing of the spent satellite in a safe location away from population centers, such as the ocean.
Official Gazette of the U.S. Patent and Trademark Office
Robotics; Satellites; Space Debris; Spacecraft Structures; Orbits

14
GROUND SUPPORT SYSTEMS AND FACILITIES (SPACE)

Includes launch complexes, research and production facilities; ground support equipment, e.g., mobile transporters; and test chambers and simulators. Also includes extraterrestrial bases and supporting equipment. For related information see also *09 Research and Support Facilities (Air)*.

20080009439 Boeing Co., Chicago, IL USA

Methods and systems for advanced spaceport information management

Fussell, Ronald M., Inventor; Ely, Donald W., Inventor; Meier, Gary M., Inventor; Halpin, Paul C., Inventor; Meade, Phillip T., Inventor; Jacobson, Craig A., Inventor; Blackwell-Thompson, Charlie, Inventor; November 27, 2007; 15 pp.; In English
Contract(s)/Grant(s): NAS10-02007; NAS10-11400; Patent Info.: Filed March 17, 2005; US-Patent-7,302,364; US-Patent-Appl-SN-11/083,420; No Copyright; Avail: CASI; A03, Hardcopy
ONLINE: http://hdl.handle.net/2060/20080009439

Advanced spaceport information management methods and systems are disclosed. In one embodiment, a method includes coupling a test system to the payload and transmitting one or more test signals that emulate an anticipated condition from the test system to the payload. One or more responsive signals are received from the payload into the test system and are analyzed to determine whether one or more of the responsive signals comprises an anomalous signal. At least one of the steps of transmitting, receiving, analyzing and determining includes transmitting at least one of the test signals and the responsive signals via a communications link from a payload processing facility to a remotely located facility. In one particular embodiment, the communications link is an Internet link from a payload processing facility to a remotely located facility (e.g. a launch facility, university, etc.).

Official Gazette of the U.S. Patent and Trademark Office

Space Transportation; Payloads; Information Management; Systems Management; Tests

20080009770 NASA Kennedy Space Center, Cocoa Beach, FL, USA

Methods and Systems for Advanced Spaceport Information Management

Fussell, Ronald M., Inventor; Ely, Donald W., Inventor; Meier, Gary M., Inventor; Halpin, Paul C., Inventor; Meade, Phillip T., Inventor; Jacobson, Craig A., Inventor; Blackwell-Thompson, Charlie, Inventor; November 27, 2007; 15 pp.; In English; Original contains black and white illustrations
Patent Info.: Filed 17 Mar. 2005; US-Patent-7,302,364; US-Patent-Appl-SN-11/083420; US-Patent-Appl-SN-60/593014; NASA-Case-KSC-12669; No Copyright; Avail: CASI; A03, Hardcopy
ONLINE: http://hdl.handle.net/2060/20080009770

Advanced spaceport information management methods and systems are disclosed. In one embodiment, a method includes coupling a test system to the payload and transmitting one or more test signals that emulate an anticipated condition from the test system to the payload. One or more responsive signals are received from the payload into the test system and are analyzed to determine whether one or more of the responsive signals comprises an anomalous signal. At least one of the steps of transmitting, receiving, analyzing and determining includes transmitting at least one of the test signals and the responsive signals via a communications link from a payload processing facility to a remotely located facility. In one particular embodiment, the communications link is an Internet link from a payload processing facility to a remotely located facility (e.g. a launch facility, university, etc.).

Author

Information Management; Launching Bases; Space Transportation; Systems Management; Ground Operational Support System

17
SPACE COMMUNICATIONS, SPACECRAFT COMMUNICATIONS, COMMAND AND TRACKING

Includes space systems telemetry; space communications networks; astronavigation and guidance; and spacecraft radio blackout. For related information see also *04 Aircraft Communications and Navigation*; and *32 Communications and Radar*.

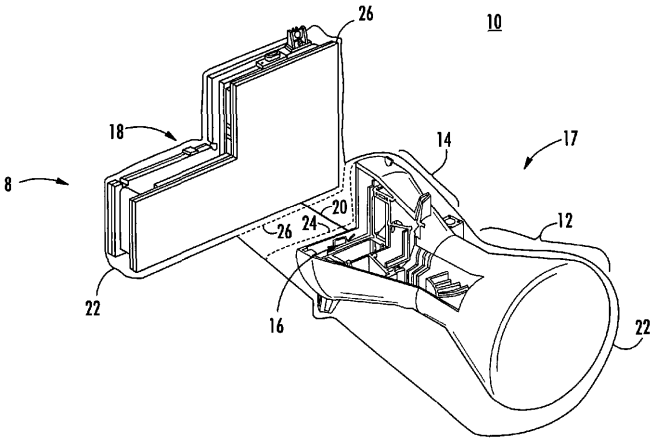

20080009483 Draper (Charles Stark) Lab., Inc., Cambridge, MA USA

Integrated inertial stellar attitude sensor

Brady, Tye M., Inventor; Kourepenis, Anthony S., Inventor; Wyman, Jr., William F., Inventor; May 8, 2007; 36 pp.; In English

Patent Info.: Filed July 16, 2003; US-Patent-7,216,036; US-Patent-Appl-SN-10/621,097; No Copyright; Avail: CASI; A03, Hardcopy

ONLINE: http://hdl.handle.net/2060/20080009483

An integrated inertial stellar attitude sensor for an aerospace vehicle includes a star camera system, a gyroscope system, a controller system for synchronously integrating an output of said star camera system and an output of said gyroscope system into a stream of data, and a flight computer responsive to said stream of data for determining from the star camera system output and the gyroscope system output the attitude of the aerospace vehicle.

Official Gazette of the U.S. Patent and Trademark Office

Aerospace Vehicles; Attitude (Inclination); Cameras; Controllers; Gyroscopes; Stars

23
CHEMISTRY AND MATERIALS (GENERAL)

Includes general research topics related to the composition, properties, structure, and use of chemical compounds and materials as they relate to aircraft, launch vehicles, and spacecraft. For specific topics in chemistry and materials see *categories 25 through 29*. For astrochemistry see category *90 Astrophysics*.

20080009457 NASA, Washington, DC USA

Water outlet control mechanism for fuel cell system operation in variable gravity environments

Vasquez, Arturo, Inventor; McCurdy, Kerri L., Inventor; Bradley, Karla F., Inventor; July 31, 2007; 9 pp.; In English

Patent Info.: Filed June 16, 2004; US-Patent-7,250,075; US-Patent-Appl-SN-10/874,004; No Copyright; Avail: CASI; A02, Hardcopy

ONLINE: http://hdl.handle.net/2060/20080009457

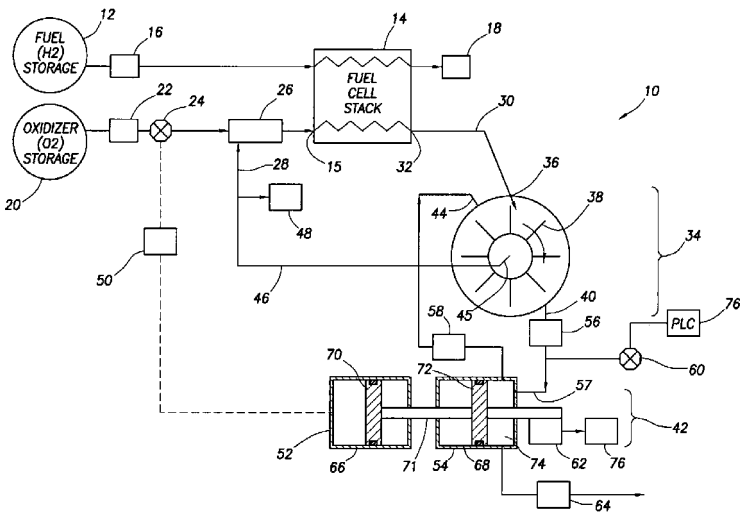

A self-regulated water separator provides centrifugal separation of fuel cell product water from oxidant gas. The system uses the flow energy of the fuel cell's two-phase water and oxidant flow stream and a regulated ejector or other reactant circulation pump providing the two-phase fluid flow. The system further uses a means of controlling the water outlet flow rate away from the water separator that uses both the ejector's or reactant pump's supply pressure and a compressibility sensor to provide overall control of separated water flow either back to the separator or away from the separator.

Official Gazette of the U.S. Patent and Trademark Office

Centrifugal Force; Controllers; Fuel Cells; Gravitation; Oxidizers; Separators; Water

20080020206 California Inst. of Tech., Pasadena, CA USA

Chemical sensor system

Darrach, Murray R., Inventor; Chutjian, Ara, Inventor; February 19, 2008; 15 pp.; In English

Patent Info.: Filed November 12, 2002; US-Patent-7,332,345; US-Patent-Appl-SN-10/293,966; No Copyright; Avail: CASI; A03, Hardcopy

ONLINE: http://hdl.handle.net/2060/20080020206

A chemical sensing apparatus and method for the detection of sub parts-per-trillion concentrations of molecules in a sample by optimizing electron utilization in the formation of negative ions is provided. A variety of media may be sampled including air, seawater, dry sediment, or undersea sediment. An electrostatic mirror is used to reduce the kinetic energy of an electron beam to zero or near-zero kinetic energy.

Official Gazette of the U.S. Patent and Trademark Office

Chemical Composition; Detection; Negative Ions; Electrostatics; Chemical Analysis; Molecules; Kinetic Energy

20080023613 NASA, Washington, DC, USA

Method and system for fiber optic determination of gas concentrations in liquid receptacles

Nguyen, Quang-Viet, Inventor; June 10, 2008; 24 pp.; In English

Patent Info.: Filed April 28, 2006; US-Patent-7,385,692; US-Patent-Appl-SN-11/412,924; No Copyright; Avail: CASI; A03, Hardcopy

ONLINE: http://hdl.handle.net/2060/20080023613

A system for determining gas compositions includes a probe, inserted into a source of gaseous material, the probe having a gas permeable sensor tip and being capable of sending and receiving light to and from the gaseous material, a sensor body, connected to the probe, situated outside of the source and a fiber bundle, connected to the sensor body and communicating light to and from the probe. The system also includes a laser source, connected to one portion of the fiber bundle and providing laser light to the fiber bundle and the probe a Raman spectrograph, connected to another portion of the fiber bundle, receiving light from the probe and filtering the received light into specific channels and a data processing unit, receiving and analyzing the received light in the specific channels and outputting concentration of specific gas species in the gaseous material based on the analyzed received light.

Official Gazette of the U.S. Patent and Trademark Office

Fiber Optics; Gas Composition; Gas Detectors; Concentration (Composition)

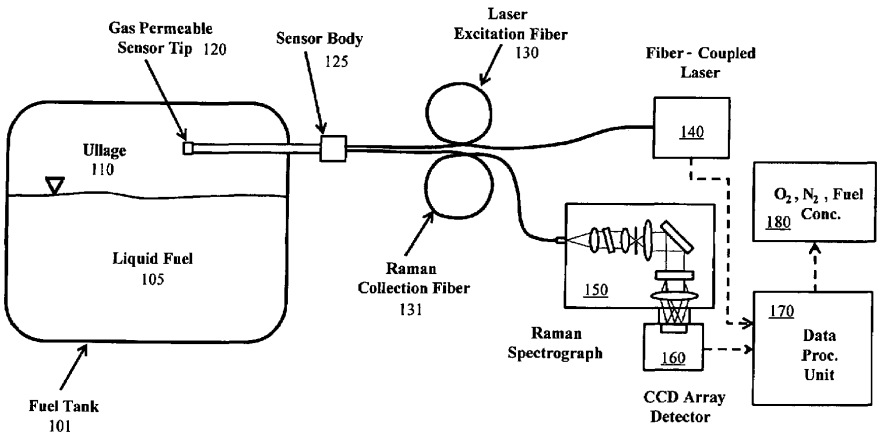

20080025653 Alliant Techsystems, Inc., Edina, MN USA

EPDM rocket motor insulation

Guillot, David G., Inventor; Harvey, Albert R., Inventor; May 13, 2008; 20 pp.; In English

Contract(s)/Grant(s): NAS8-38100; Patent Info.: Filed August 31, 2004; US-Patent-7,371,784; US-Patent-Appl-SN-10/931,778; No Copyright; Avail: CASI; A03, Hardcopy

ONLINE: http://hdl.handle.net/2060/20080025653

A novel and improved EPDM formulation for a solid propellant rocket motor is described wherein hexadiene EPDM monomer components are replaced by alkylidene norbornene components, and, with appropriate adjustment of curing and

other additives, functionally required rheological and physical characteristics are achieved with the desired compatibility with any one of a plurality of solid filler materials, e.g., powder silica, carbon fibers or aramid fibers, and with appropriate adhesion and extended storage or shelf-life characteristics.
Official Gazette of the U.S. Patent and Trademark Office
Rocket Engines; Insulation; Monomers; Alkylidene; Carbon Fibers

20080025654 NASA, Washington, DC USA
Catalyst for treatment and control of post-combustion emissions
Upchurch, legal representative, Wilhelmina H., Inventor; Schryer, David R., Inventor; Upchurch, Billy T., Inventor; May 13, 2008; 4 pp.; In English
Patent Info.: Filed October 25, 2004; US-Patent-7,371,358; US-Patent-Appl-SN-10/975,117; No Copyright; Avail: CASI; A01, Hardcopy
ONLINE: http://hdl.handle.net/2060/20080025654

The present invention utilizes two precious metals with two to five different metal-oxides in a layered matrix to convert CO, HCs, and NOx to CO.sub.2, and N.sub.2 by oxidation of two components and reduction of the other in a moderately high temperature gaseous environment containing excess oxygen.
Official Gazette of the U.S. Patent and Trademark Office
Combustion Products; Carbon Dioxide; Metal Oxides; Noble Metals; Nitrogen Oxides; Catalysts; Oxidation

24
COMPOSITE MATERIALS

Includes physical, chemical, and mechanical properties of laminates and other composite materials.

20080009430 NASA, Washington, DC USA
Approach for achieving flame retardancy while retaining physical properties in a compatible polymer matrix
Williams, Martha K., Inventor; Smith, Trent M., Inventor; December 18, 2007; 13 pp.; In English
Patent Info.: Filed October 6, 2004; US-Patent-7,309,738; US-Patent-Appl-SN-10/962,827; No Copyright; Avail: CASI; A03, Hardcopy
ONLINE: http://hdl.handle.net/2060/20080009430

The invention provides polymer blends containing polyhydroxyamide and one or more flammable polymers. The polymer blends are flame retardant and have improved durability and heat stability compared to the flammable polymer portion of the blends. Articles containing the polymer blends are also provided.
Official Gazette of the U.S. Patent and Trademark Office
Flame Retardants; Polymer Blends; Flammability; Thermal Stability

20080009440 Vermont Univ., Burlington, VT USA
Self-healing cable apparatus and methods
Huston, Dryver, Inventor; Esser, Brian, Inventor; November 27, 2007; 12 pp.; In English
Contract(s)/Grant(s): NCC5-581; Patent Info.: Filed February 27, 2006; US-Patent-7,302,145; US-Patent-Appl-SN-11/362,611; No Copyright; Avail: CASI; A03, Hardcopy
ONLINE: http://hdl.handle.net/2060/20080009440

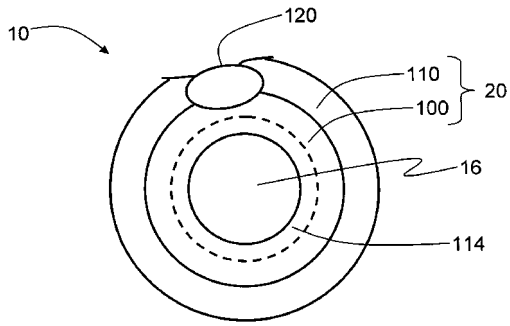

Self-healing cable apparatus and methods are disclosed. The cable has a central core surrounded by an adaptive cover that can extend over the entire length of the cable or just one or more portions of the cable. The adaptive cover includes a protective layer having an initial damage resistance, and a reactive layer. When the cable is subjected to a localized damaging force, the reactive layer responds by creating a corresponding localized self-healed region. The self-healed region provides the cable with enhanced damage resistance as compared to the cable's initial damage resistance. Embodiments of the invention utilize conventional epoxies or foaming materials in the reactive layer that are released to form the self-healed region when the damaging force reaches the reactive layer.
Official Gazette of the U.S. Patent and Trademark Office
Cables; Coverings; Abrasion Resistance; Epoxy Matrix Composites; Foams

20080009444 Ultramet Co., Pacoima, CA USA

Method of making carbon fiber-carbon matrix reinforced ceramic composites

Williams, Brian, Inventor; Benander, Robert, Inventor; November 20, 2007; 8 pp.; In English

Contract(s)/Grant(s): NAS8-99093; Patent Info.: Filed April 15, 2004; US-Patent-7,297,368; US-Patent-Appl-SN-10/824,746; No Copyright; Avail: CASI; A02, Hardcopy

ONLINE: http://hdl.handle.net/2060/20080009444

A method of making a carbon fiber-carbon matrix reinforced ceramic composite wherein the result is a carbon fiber-carbon matrix reinforcement is embedded within a ceramic matrix. The ceramic matrix does not penetrate into the carbon fiber-carbon matrix reinforcement to any significant degree. The carbide matrix is a formed in situ solid carbide of at least one metal having a melting point above about 1850 degrees centigrade. At least when the composite is intended to operate between approximately 1500 and 2000 degrees centigrade for extended periods of time the solid carbide with the embedded reinforcement is formed first by reaction infiltration. Molten silicon is then diffused into the carbide. The molten silicon diffuses preferentially into the carbide matrix but not to any significant degree into the carbon-carbon reinforcement. Where the composite is intended to operate between approximately 2000 and 2700 degrees centigrade for extended periods of time such diffusion of molten silicon into the carbide is optional and generally preferred, but not essential.

Official Gazette of the U.S. Patent and Trademark Office

Carbon; Carbon Fibers; Ceramic Matrix Composites; Embedding; Fiber Composites; High Temperature; Thermal Resistance; Coatings

20080009467 TDA Research, Inc., Wheat Ridge, CO USA

Nanoparticles modified with multiple organic acids

Cook, Ronald Lee, Inventor; Luebben, Silvia DeVito, Inventor; Myers, Andrew William, Inventor; Smith, Bryan Matthew, Inventor; Elliott, Brian John, Inventor; Kreutzer, Cory, Inventor; Wilson, Carolina, Inventor; Meiser, Manfred, Inventor; July 17, 2007; 27 pp.; In English

Contract(s)/Grant(s): NAS9-03017; Patent Info.: Filed May 3, 2005; US-Patent-7,244,498; US-Patent-Appl-SN-11/120,650; No Copyright; Avail: CASI; A03, Hardcopy

ONLINE: http://hdl.handle.net/2060/20080009467

Figure 1

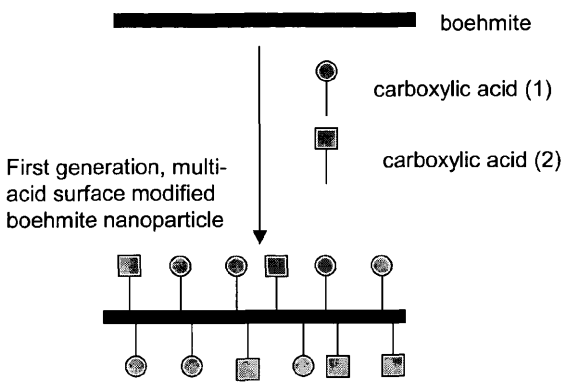

Surface-modified nanoparticles of boehmite, and methods for preparing the same. Aluminum oxyhydroxide nanoparticles are surface modified by reaction with selected amounts of organic acids. In particular, the nanoparticle surface is modified by reactions with two or more different carboxylic acids, at least one of which is an organic carboxylic acid. The product is a surface modified boehmite nanoparticle that has an inorganic aluminum oxyhydroxide core, or part aluminum oxyhydroxide core and a surface-bonded organic shell. Organic carboxylic acids of this invention contain at least one carboxylic acid group and one carbon-hydrogen bond. One embodiment of this invention provides boehmite nanoparticles that have been surface modified with two or more acids one of which additional carries at least one reactive functional group. Another embodiment of this invention provides boehmite nanoparticles that have been surface modified with multiple acids one of which has molecular weight or average molecular weight greater than or equal to 500 Daltons. Yet, another embodiment of this invention provides boehmite nanoparticles that are surface modified with two or more acids one of which is hydrophobic in nature and has solubility in water of less than 15 by weight. The products of the methods of this invention have specific useful properties when used in mixture with liquids, as filler in solids, or as stand-alone entities.

Official Gazette of the U.S. Patent and Trademark Office

Aluminum Oxides; Nanoparticles

20080009491 Boeing Co., Chicago, IL USA

Ceramic fiber insulation impregnated with an infra-red retardant coating and method for production thereof

Zinn, Alfred A., Inventor; Tarkanian, Ryan Jeffrey, Inventor; April 3, 2007; 16 pp.; In English

Contract(s)/Grant(s): NAS9-200000; Patent Info.: Filed August 16, 2002; US-Patent-7,198,839; US-Patent-Appl-SN-10/222,503; No Copyright; Avail: CASI; A03, Hardcopy

ONLINE: http://hdl.handle.net/2060/20080009491

The invented insulation is a ceramic fiber insulation wherein the ceramic fibers are treated with a coating which contains transition metal oxides. The invented process for coating the insulation is a process of applying the transition metal oxide coating to the fibers of the insulation after the fibers have been formed into a tile or other porous body. The coating of transition

metal oxide lowers the transmittance of radiation through the insulation thereby lowering the temperature of the backface of the insulation and better protecting the structure that underlies the insulation.
Official Gazette of the U.S. Patent and Trademark Office
Ceramic Fibers; Coating; Insulation; Metal Oxides

20080009644 NASA, Washington, DC USA
Method for nanoencapsulation of aerogels and nanoencapsulated aerogels produced by such method
Sullivan, Thomas A., Inventor; September 18, 2007; 10 pp.; In English
Patent Info.: Filed November 4, 2004; US-Patent-7,270,851; US-Patent-Appl-SN-10/985,081; No Copyright; Avail: CASI; A02, Hardcopy
ONLINE: http://hdl.handle.net/2060/20080009644

A method for increasing the compressive modulus of aerogels comprising: providing aerogel substrate comprising a bubble matrix in a chamber; providing monomer to the chamber, the monomer comprising vapor phase monomer which polymerizes substantially free of polymerization byproducts; depositing monomer from the vapor phase onto the surface of the aerogel substrate under deposition conditions effective to produce a vapor pressure sufficient to cause the vapor phase monomer to penetrate into the bubble matrix and deposit onto the surface of the aerogel substrate, producing a substantially uniform monomer film; and, polymerizing the substantially uniform monomer film under polymerization conditions effective to produce polymer coated aerogel comprising a substantially uniform polymer coating substantially free of polymerization byproducts.Polymer coated aerogel comprising aerogel substrate comprising a substantially uniform polymer coating, said polymer coated aerogel comprising porosity and having a compressive modulus greater than the compressive modulus of the aerogel substrate, as measured by a 100 lb. load cell at 1 mm/minute in the linear range of 20% to 40% compression.
Official Gazette of the U.S. Patent and Trademark Office
Aerogels; Capsules; Nanofabrication; Compressibility; Polymers; Coatings

20080009742 NASA Langley Research Center, Hampton, VA, USA
Carbon Nanotube Reinforced Porous Carbon Having Three-Dimensionally Ordered Porosity and Method of Fabricating Same
Yorktown, Ji Su, Inventor; Huang, Ngan Fong, Inventor; August 07, 2007; 12 pp.; In English; Original contains black and white illustrations
Patent Info.: Filed 25 Jul. 2005; US-Patent-7,252,884; US-Patent-Appl-SN-11/190212; NASA-Case-LAR-16386-1; No Copyright; Avail: CASI; A03, Hardcopy
ONLINE: http://hdl.handle.net/2060/20080009742

A solid carbon has CNTs dispersed therein and is formed about three-dimensionally ordered spherical voids arranged in an opal-like lattice.
Official Gazette of the U.S. Patent and Trademark Office
Carbon Nanotubes; Fabrication; Porosity; Reinforcing Materials

20080009747 NASA Ames Research Center, Moffett Field, CA, USA
Nanoengineered Thermal Materials Based on Carbon Nanotube Array Composites
Li, Jun, Inventor; Meyyappan, Meyya, Inventor; September 25, 2007; 16 pp.; In English; Original contains black and white illustrations
Patent Info.: Filed 13 Apr. 2004; US-Patent-7,273,095; US-Patent-Appl-SN-10/825795; NASA-Case-ARC-15173-1; No Copyright; Avail: CASI; A03, Hardcopy
ONLINE: http://hdl.handle.net/2060/20080009747

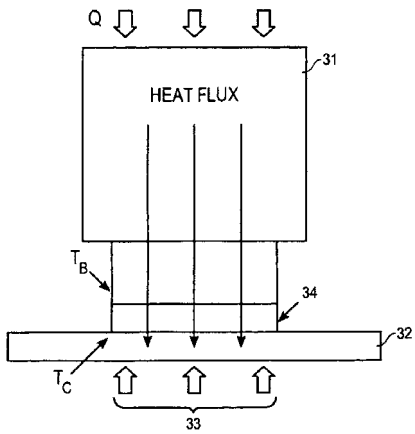

FIG. 3A

A method for providing for thermal conduction using an array of carbon nanotubes (CNTs). An array of vertically oriented CNTs is grown on a substrate having high thermal conductivity, and interstitial regions between adjacent CNTs in the array are partly or wholly filled with a filler material having a high thermal conductivity so that at least one end of each CNT is exposed. The exposed end of each CNT is pressed against a surface of an object from which heat is to be removed. The CNT-filler composite adjacent to the substrate provides improved mechanical strength to anchor CNTs in place and also serves as a heat spreader to improve diffusion of heat flux from the smaller volume (CNTs) to a larger heat sink.
Official Gazette of the U.S. Patent and Trademark Office
Carbon Nanotubes; Thermal Conductivity; Composite Materials; Nanotechnology

20080009771 NASA Kennedy Space Center, Cocoa Beach, FL, USA

Process for Self-Repair of Insulation Material

Parrish, Clyde F., Inventor; October 23, 2007; 8 pp.; In English; Original contains black and white illustrations

Patent Info.: Filed 8 Oct. 2003; US-Patent-7,285,306; US-Patent-Appl-SN-10/684064; US-Patent-Appl-SN-60/464050; NASA-Case-KSC-12539; No Copyright; Avail: CASI; A02, Hardcopy

ONLINE: http://hdl.handle.net/2060/20080009771

A self-healing system for an insulation material initiates a self-repair process by rupturing a plurality of microcapsules disposed on the insulation material. When the plurality of microcapsules are ruptured reactants witlun the plurality of microcapsules react to form a replacement polymer in a break of the insulation material. This self-healing system has the ability to repair multiple breaks in a length of insulation material without exhausting the repair properties of the material.

Official Gazette of the U.S. Patent and Trademark Office

Self Repairing Devices; Composite Materials; Capsules; Insulation

20080018541 Alliant Techsystems, Inc., Edina, MN USA

Polybenzoxazole-filled nitrile butadiene rubber compositions

Gajiwala, Himansu M., Inventor; Guillot, David G., Inventor; April 15, 2008; 10 pp.; In English

Contract(s)/Grant(s): NAS8-97238; Patent Info.: Filed August 18, 2005; US-Patent-7,358,314; US-Patent-Appl-SN-11/207,855; No Copyright; Avail: CASI; A02, Hardcopy

ONLINE: http://hdl.handle.net/2060/20080018541

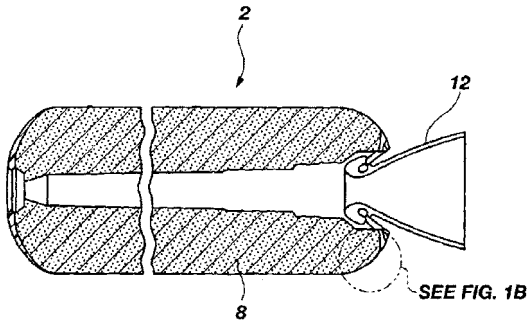

FIG. 1A

An insulation composition that comprises at least one nitrile butadiene rubber (NBR) having an acrylonitrile content that ranges from approximately 26% by weight to approximately 35% by weight and polybenzoxazole (PBO) fibers. The NBR may be a copolymer of acrylonitrile and butadiene and may be present in the insulation composition in a range of from approximately 45% by weight to approximately 56% by weight of a total weight of the insulation composition. The PBO fibers may be present in a range of from approximately 3% by weight to approximately 10% by weight of a total weight of the insulation composition. A rocket motor including the insulation composition and a method of insulating a rocket motor are also disclosed.

Official Gazette of the U.S. Patent and Trademark Office

Insulation; Synthetic Rubbers; Composite Materials

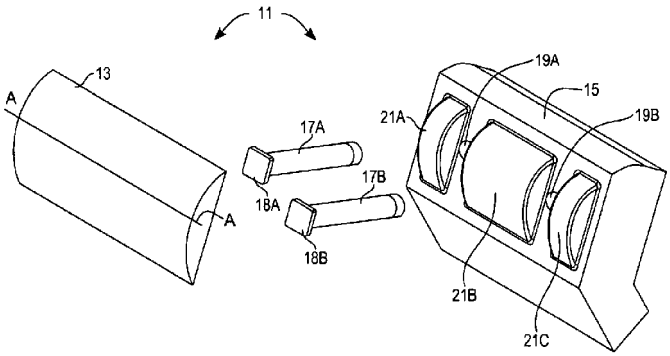

20080018811 NASA, Washington, DC USA

Toughened uni-piece, fibrous, reinforced, oxidization-resistant composite

Stewart, David A., Inventor; Leiser, Daniel B., Inventor; January 1, 2008; 16 pp.; In English

Patent Info.: Filed July 27, 2004; US-Patent-7,314,648; US-Patent-Appl-SN-10/911,747; No Copyright; Avail: CASI; A03, Hardcopy

ONLINE: http://hdl.handle.net/2060/20080018811

A composite thermal protection structure, for applications such as atmospheric re-entry vehicles, that can withstand temperatures as high as 3600.degree. F. The structure includes an exposed surface cap having a specially formulated coating, an insulator base adjacent to the cap with another specially formulated coating, and one or more pins that extend from the cap through the insulator base to tie the cap and base together, through ceramic bonding and mechanical attachment. The cap and insulator base have corresponding depressions and projections that mate and allow for differences in thermal expansion of the cap and base. A thin coating of a reaction cured glass formulation is optionally provided on the structure to allow reduce oxidization and/or to reduce catalytic efficiency.

Official Gazette of the U.S. Patent and Trademark Office

Composite Structures; Thermal Protection; Ceramic Bonding; Insulators; Thermal Expansion

20080025696 NASA, Washington, DC USA

Toughened uni-piece, fibrous, reinforced, oxidization-resistant composite

Stewart, David A., Inventor; Leiser, Daniel B., Inventor; June 3, 2008; 15 pp.; In English

Patent Info.: Filed February 12, 2004; US-Patent-7,381,459; US-Patent-Appl-SN-10/779,504; No Copyright; Avail: CASI; A03, Hardcopy

ONLINE: http://hdl.handle.net/2060/20080025696

A composite thermal protection structure, for applications such as atmospheric re-entry vehicles, that can withstand temperatures as high as 3600.degree F. The structure includes an exposed surface cap having a specially formulated coating, an insulator base adjacent to the cap with another specially formulated coating, and one or more pins that extend from the cap through the insulator base to tie the cap and base together, through ceramic bonding and mechanical attachment. The cap and insulator base have corresponding depressions and projections that mate and allow for differences in thermal expansion of the cap and base.

Official Gazette of the U.S. Patent and Trademark Office

Coating; Composite Structures; Thermal Protection; Reentry Shielding; Ablative Materials; Heat Shielding; Oxidation Resistance

25
INORGANIC, ORGANIC AND PHYSICAL CHEMISTRY

Includes the analysis, synthesis, and use of inorganic and organic compounds; combustion theory; electrochemistry; and photochemistry. For related information see category *34 Fluid Dynamics and Thermodynamics*. For astrochemistry see category *90 Astrophysics*.

20080009448 NASA, Washington, DC USA

Microparticle analysis system and method

Morrison, Dennis R., Inventor; November 13, 2007; 18 pp.; In English

Patent Info.: Filed December 9, 2003; US-Patent-7,295,309; US-Patent-Appl-SN-10/734,753; No Copyright; Avail: CASI; A03, Hardcopy

ONLINE: http://hdl.handle.net/2060/20080009448

A device for analyzing microparticles is provided which includes a chamber with an inlet and an outlet for respectively introducing and dispensing a flowing fluid comprising microparticles, a light source for providing light through the chamber and a photometer for measuring the intensity of light transmitted through individual microparticles. The device further includes an imaging system for acquiring images of the fluid. In some cases, the device may be configured to identify and determine a quantity of the microparticles within the fluid. Consequently, a method for identifying and tracking microparticles in motion is contemplated herein. The method involves flowing a fluid comprising microparticles in laminar motion through a chamber, transmitting light through the fluid, measuring the intensities of the light transmitted through the microparticles, imaging the fluid a plurality of times and comparing at least some of the intensities of light between different images of the fluid.

Official Gazette of the U.S. Patent and Trademark Office

Microparticles; Imaging Techniques; Light Sources; Fluid Flow; Optical Resonance

20080009456

Process for derivatizing carbon nanotubes with diazonium species

Tour, James M., Inventor; Bahr, Jeffrey L., Inventor; Yang, Jiping, Inventor; July 31, 2007; 25 pp.; In English

Contract(s)/Grant(s): NCC9-77; Patent Info.: Filed January 29, 2002; US-Patent-7,250,147; US-Patent-Appl-SN-10/470,517; No Copyright; Avail: CASI; A03, Hardcopy

ONLINE: http://hdl.handle.net/2060/20080009456

The invention incorporates new processes for the chemical modification of carbon nanotubes. Such processes involve the derivatization of multi- and single-wall carbon nanotubes, including small diameter (ca. 0.7 nm) single-wall carbon nanotubes, with diazonium species. The method allows the chemical attachment of a variety of organic compounds to the side and ends of carbon nanotubes. These chemically modified nanotubes have applications in polymer composite materials, molecular electronic applications and sensor devices. The methods of derivatization include electrochemical induced reactions thermally induced reactions (via in-situ generation of diazonium compounds or pre-formed diazonium compounds), and photochemically induced reactions. The derivatization causes significant changes in the spectroscopic properties of the nanotubes. The estimated degree of functionality is ca. 1 out of every 20 to 30 carbons in a nanotube bearing a functionality moiety. Such electrochemical reduction processes can be adapted to apply site-selective chemical functionalization of

nanotubes. Moreover, when modified with suitable chemical groups, the derivatized nanotubes are chemically compatible with a polymer matrix, allowing transfer of the properties of the nanotubes (such as, mechanical strength or electrical conductivity) to the properties of the composite material as a whole. Furthermore, when modified with suitable chemical groups, the groups can be polymerized to form a polymer that includes carbon nanotubes ##STR00001##.
Official Gazette of the U.S. Patent and Trademark Office
Azo Compounds; Carbon Nanotubes; Electrochemistry

20080009473 California Inst. of Tech., Pasadena, CA USA
Pyrolyzed-parylene based sensors and method of manufacture
Tai, Yu-Chong, Inventor; Liger, Matthieu, Inventor; Miserendino, Scott, Inventor; Konishi, Satoshi, Inventor; July 3, 2007; 27 pp.; In English
Contract(s)/Grant(s): NCC2-13644; Patent Info.: Filed October 25, 2004; US-Patent-7,238,941; US-Patent-Appl-SN-10/973,938; No Copyright; Avail: CASI; A03, Hardcopy
ONLINE: http://hdl.handle.net/2060/20080009473

A method (and resulting structure) for fabricating a sensing device. The method includes providing a substrate comprising a surface region and forming an insulating material overlying the surface region. The method also includes forming a film of carbon based material overlying the insulating material and treating to the film of carbon based material to pyrolyzed the carbon based material to cause formation of a film of substantially carbon based material having a resistivity ranging within a predetermined range. The method also provides at least a portion of the pyrolyzed carbon based material in a sensor application and uses the portion of the pyrolyzed carbon based material in the sensing application. In a specific embodiment, the sensing application is selected from chemical, humidity, piezoelectric, radiation, mechanical strain or temperature.
Official Gazette of the U.S. Patent and Trademark Office
Fabrication; Pyrolysis; Bolometers; Electromagnetic Radiation

20080009478 Arizona Univ., Phoenix, AZ USA
Method of producing purified carotenoid compounds
Eggink, Laura, Inventor; June 12, 2007; 6 pp.; In English
Contract(s)/Grant(s): NAGW-547; Patent Info.: Filed December 28, 2000; US-Patent-7,229,786; US-Patent-Appl-SN-10/169,117; No Copyright; Avail: CASI; A02, Hardcopy
ONLINE: http://hdl.handle.net/2060/20080009478

A method of producing a carotenoid in solid form includes culturing a strain of Chlorophyta algae cells in a minimal inorganic medium and separating the algae comprising a solid form of carotenoid. In one embodiment f the invention, the strain of Chlorophyta algae cells includes a strain f Chlamydomonas algae cells.
Official Gazette of the U.S. Patent and Trademark Office
Algae; Carotenoids

20080009500 NASA, Washington, DC USA
Corrosion prevention of cold rolled steel using water dispersible lignosulfonic acid doped polyaniline
Viswanathan, Tito, Inventor; February 20, 2007; 9 pp.; In English
Patent Info.: Filed August 26, 2005; US-Patent-7,179,404; US-Patent-Appl-SN-11/215,205; No Copyright; Avail: CASI; A02, Hardcopy
ONLINE: http://hdl.handle.net/2060/20080009500

The invention provides coatings useful for preventing corrosion of metals. The coatings comprise a film-forming resin and conductive polymers comprising linearly conjugated .pi.-systems and residues of sulfonated lignin or a sulfonated polyflavonoid or derivatives of solfonated lignin or a sulfonated polyflavonoid. The invention also provides a latex formulation of the coatings, and articles of manufacture comprising a metal substrate and a coating in contact with the metal substrate.
Official Gazette of the U.S. Patent and Trademark Office
Cold Rolling; Corrosion Prevention; Doped Crystals; Steels

20080009505 Advanced Fuel Research, Inc., East Hartford, CT USA
Pyrolysis processing for solid waste resource recovery
Serio, Michael A., Inventor; Kroo, Erik, Inventor; Wojtowicz, Marek A., Inventor; Suuberg, Eric M., Inventor; January 30, 2007; 14 pp.; In English
Contract(s)/Grant(s): NAS2-99001; NAS2-00007; Patent Info.: Filed July 10, 2001; US-Patent-7,169,197; US-Patent-Appl-SN-09/902,425; No Copyright; Avail: CASI; A03, Hardcopy

ONLINE: http://hdl.handle.net/2060/20080009505

Solid waste resource recovery in space is effected by pyrolysis processing, to produce light gases as the main products (CH.sub.4, H.sub.2, CO.sub.2, CO, H.sub.2O, NH.sub.3) and a reactive carbon-rich char as the main byproduct. Significant amounts of liquid products are formed under less severe pyrolysis conditions, and are cracked almost completely to gases as the temperature is raised. A primary pyrolysis model for the composite mixture is based on an existing model for whole biomass materials, and an artificial neural network models the changes in gas composition with the severity of pyrolysis conditions.

Official Gazette of the U.S. Patent and Trademark Office

Pyrolysis; Solid Wastes

20080009630 University of Central Florida, Orlando, FL USA

Catalytic dehydrogenation of amine borane complexes

Mohajeri, Nahid, Inventor; Tabatabaie-Raissi, Ali, Inventor; October 23, 2007; 17 pp.; In English

Contract(s)/Grant(s): NAG3-2751; Patent Info.: Filed April 28, 2006; US-Patent-7,285,142; US-Patent-Appl-SN-11/414,572; No Copyright; Avail: CASI; A03, Hardcopy

ONLINE: http://hdl.handle.net/2060/20080009630

A method of generating hydrogen includes the steps of providing an amine borane (AB) complex, at least one hydrogen generation catalyst, and a solvent, and mixing these components. Hydrogen is generated. The hydrogen produced is high purity hydrogen suitable for PEM fuel cells. A hydrolytic in-situ hydrogen generator includes a first compartment that contains an amine borane (AB) complex, a second container including at least one hydrogen generation catalyst, wherein the first or second compartment includes water or other hydroxyl group containing solvent. A connecting network permits mixing contents in the first compartment with contents in the second compartment, wherein high purity hydrogen is generated upon mixing. At least one flow controller is provided for controlling a flow rate of the catalyst or AB complex.

Official Gazette of the U.S. Patent and Trademark Office

Amines; Boranes; Catalysts; Dehydrogenation; Hydrogen; Solvents

20080009749 NASA Kennedy Space Center, Cocoa Beach, FL, USA

Removal of PCB and Other Halogenated Organic Contaminants found in Ex Situ Structures

Quinn, Jacqueline, Inventor; Clausen, Christian, Inventor; Geiger, Cherie L., Inventor; Coon, Christina, Inventor; Berger, Cristina M., Inventor; Filipek, Laura B., Inventor; Milum, Kristen M., Inventor; September 18, 2007; 6 pp.; In English; Original contains black and white illustrations

Patent Info.: Filed 27 Oct. 2004; US-Patent-7,271,199; US-Patent-Appl-SN-10/977622; US-Patent-Appl-SN-60/523656; NASA-Case-KSC-12637; No Copyright; Avail: CASI; A02, Hardcopy

ONLINE: http://hdl.handle.net/2060/20080009749

Emulsified systems or a surfactant-stabilized, biodegradable water-in-solvent emulsion with bimetallic particles contained with the emulsion droplets are useful at removing PCBs from ex situ structures. The hydrophobic emulsion system draws PCBs through the solvent/surfactant membrane. Once inside the membrane, the PCBs diffuse into the bimetallic particles and undergo degradation. The PCBs continue to enter, diffuse, degrade, and biphenyl will exit the particle maintaining a concentration gradient across the membrane and maintaining a driving force of the reaction.

Author

Bimetals; Biodegradability; Emulsions; Polychlorinated Biphenyls; Environmental Cleanup; Decontamination; Water Treatment

20080018537 Massachusetts Univ., Boston, MA USA

Crystalline Membranes

Tsapatsis, Michael, Inventor; Lai, Zhiping, Inventor; April 15, 2008; 25 pp.; In English

Contract(s)/Grant(s): NAG8-1697; Patent Info.: Filed March 5, 2004; US-Patent-7,357,836; US-Patent-Appl-SN-10/794,483; No Copyright; Avail: CASI; A03, Hardcopy

ONLINE: http://hdl.handle.net/2060/20080018537

In certain aspects, the invention features methods for forming crystalline membranes (e.g., a membrane of a framework material, such as a zeolite) by inducing secondary growth in a layer of oriented seed crystals. The rate of growth of the seed crystals in the plane of the substrate is controlled to be comparable to the rate of growth out of the plane. As a result, a

crystalline membrane can form a substantially continuous layer including grains of uniform crystallographic orientation that extend through the depth of the layer.
Official Gazette of the U.S. Patent and Trademark Office
Membrane Structures; Crystal Growth; Zeolites

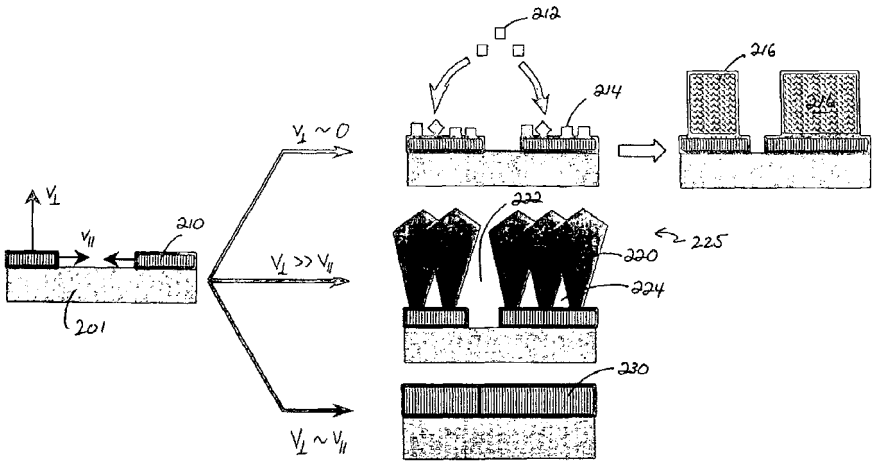

20080018814 NASA, Washington, DC USA
Oxidation-reduction catalyst and its process of use
Jordan, Jeffrey D., Inventor; Watkins, Anthony Neal, Inventor; Schryer, Jacqueline L., Inventor; Oglesby, Donald M., Inventor; January 15, 2008; 8 pp.; In English
Patent Info.: Filed January 13, 2003; US-Patent-7,318,915; US-Patent-Appl-SN-10/342,660; No Copyright; Avail: CASI; A02, Hardcopy
ONLINE: http://hdl.handle.net/2060/20080018814

This invention relates generally to a ruthenium stabilized oxidation-reduction catalyst useful for oxidizing carbon monoxide, and volatile organic compounds, and reducing nitrogen oxide species in oxidizing environments, substantially without the formation of toxic and volatile ruthenium oxide species upon said oxidizing environment being at high temperatures.
Official Gazette of the U.S. Patent and Trademark Office
Carbon Monoxide; Oxidation; Ruthenium; Volatile Organic Compounds

20080025187 Eltron Research, Inc., Boulder, CO USA
Fischer-tropsch catalysts
White, James H., Inventor; Taylor, Jesse W., Inventor; July 1, 2008; 15 pp.; In English
Patent Info.: Filed December 16, 2005; US-Patent-7,393,876; US-Patent-Appl-SN-11/303,451; No Copyright; Avail: CASI; A03, Hardcopy
ONLINE: http://hdl.handle.net/2060/20080025187

Catalyst compositions and methods for F-T synthesis which exhibit high CO conversion with minor levels (preferably less than 35% and more preferably less than 5%) or no measurable carbon dioxide generation. F-T active catalysts are prepared by reduction of certain oxygen deficient mixed metal oxides.
Official Gazette of the U.S. Patent and Trademark Office
Fischer-Tropsch Process; Catalysts

20080025188 NASA, Washington, DC USA
Stabilized tin-oxide-based oxidation/reduction catalysts
Jordan, Jeffrey D., Inventor; Schryer, David R., Inventor; Davis, Patricia P., Inventor; Leighty, Bradley D., Inventor; Watkins, Anthony Neal, Inventor; Schryer, Jacqueline L., Inventor; Oglesby, Donald M., Inventor; Gulati, Suresh T., Inventor; Summers, Jerry C., Inventor; June 24, 2008; 4 pp.; In English
Patent Info.: Filed January 22, 2002; US-Patent-7,390,768; US-Patent-Appl-SN-10/056,845; No Copyright; Avail: CASI; A01, Hardcopy
ONLINE: http://hdl.handle.net/2060/20080025188

The invention described herein involves a novel approach to the production of oxidation/reduction catalytic systems. The

present invention serves to stabilize the tin oxide reducible metal-oxide coating by co-incorporating at least another metal-oxide species, such as zirconium. In one embodiment, a third metal-oxide species is incorporated, selected from the group consisting of cerium, lanthanum, hafnium, and ruthenium. The incorporation of the additional metal oxide components serves to stabilize the active tin-oxide layer in the catalytic process during high-temperature operation in a reducing environment (e.g., automobile exhaust). Moreover, the additional metal oxides are active components due to their oxygen-retention capabilities. Together, these features provide a mechanism to extend the range of operation of the tin-oxide-based catalyst system for automotive applications, while maintaining the existing advantages.
Official Gazette of the U.S. Patent and Trademark Office
Tin Oxides; Catalysts; Oxidation-Reduction Reactions

26
METALS AND METALLIC MATERIALS

Includes physical, chemical, and mechanical properties of metals and metallic materials; and metallurgy.

20080009514 NASA, Washington, DC USA
Low density, high creep resistant single crystal superalloy for turbine airfoils
MacKay, Rebecca A., Inventor; Gabb, Timothy P., Inventor; Smialek, James L, Inventor; Nathal, Michael V., Inventor; August 28, 2007; 9 pp.; In English
Patent Info.: Filed September 22, 2004; US-Patent-7,261,783; US-Patent-Appl-SN-10/946,286; No Copyright; Avail: CASI; A02, Hardcopy
ONLINE: http://hdl.handle.net/2060/20080009514

A nickel-base superalloy article for use in turbines has increased creep resistance and lower density. The superalloy article includes, as measured in % by weight, 6.0-12.0% Mo, 5.5-6.5% Al, 3.0-7.0% Ta, 0-15% Co, 2.0-6.0% Cr, 1.0-4.0% Re, 0-1.5% W, 0-1.5% Ru, 0-2.0%-Ti, 0-3.0% Nb, 0-0.2% Hf, 0-0.02% Y, 0.001-0.005% B, 0.01-0.04% C, and a remainder including nickel plus impurities.
Official Gazette of the U.S. Patent and Trademark Office
Airfoils; Creep Strength; Heat Resistant Alloys; Single Crystals

20080009741 NASA Kennedy Space Center, Cocoa Beach, FL, USA
Corrosion Prevention of Cold Rolled Steel Using Water Dispersible Lignosulfonic Acid Doped Polyaniline
Viswanathan, Tito, Inventor; February 20, 2007; 9 pp.; In English; Original contains black and white illustrations
Patent Info.: Filed 26 Aug. 2005; US-Patent-7,179,404; US-Patent-Appl-SN-11/215205; US-Patent-Appl-SN-09/930260; US-Patent-Appl-SN-60/217493; NASA-Case-KSC-12191-1; No Copyright; Avail: CASI; A02, Hardcopy
ONLINE: http://hdl.handle.net/2060/20080009741

The invention provides coatings useful for preventing corrosion of metals. The coatings comprise a film-forming resin and conductive polymers comprising linearly conjugated x-systems and residues of sulfonated lignin or a sulfonated polyflavonoid or derivatives of solfonated lignin or a sulfonated polyflavonoid. The invention also provides a latex formulation of the coatings, and articles of manufacture comprising a metal substrate and a coating in contact with the metal substrate.
Author
Cold Rolling; Corrosion Prevention; Doped Crystals; Lignin; Steels; Coatings

20080009750 NASA Glenn Research Center, Cleveland, OH, USA
Low Density, High Creep Resistant Single Crystal Super Alloy for Turbine Airfoils
MacKay, Rebecca A., Inventor; Gabb, Timothy P., Inventor; Smialek, James L., Inventor; Nathal, Michael V., Inventor; August 28, 2007; 9 pp.; In English; Original contains black and white illustrations
Patent Info.: Filed 22 Sep. 2004; US-Patent-7,261,783; US-Patent-Appl-SN-10/946286; NASA-Case-LEW-17672-1; No Copyright; Avail: CASI; A02, Hardcopy
ONLINE: http://hdl.handle.net/2060/20080009750

A nickel-base superalloy article for use in turbines has increased creep resistance and lower density. The superalloy article includes, as measured in % by weight, 6.0-12.0% Mo, 5.5-6.5%Al, 3.0-7.0% Ta, 0-15% Co, 2.0-6.0% Cr, 1.0-4.0% Re, 0-1.5% W, 0-1.5% Ru, 0-2.0% Ti, 0-3.0% Nb, 0-0.2% Hf, 0-0.02% Y, 0.001-0.005% B, 0.01-0.04% C, and a remainder including nickel plus impurities.
Author
Airfoils; Creep Strength; Single Crystals; Nickel Alloys; Turbines; Low Density Materials; Density (Mass/Volume)

20080018756 Virginia Tech Intellectual Properties, Inc., Blacksburg, VA USA

Endohedral Metallofullerene Derivatives

Dorn, Harry C., Inventor; Iezzi, Erick B., Inventor; Duchamp, James, Inventor; April 15, 2008; 8 pp.; In English

Contract(s)/Grant(s): NCC1-01044; Patent Info.: Filed September 17, 2002; US-Patent-7,358,343; US-Patent-Appl-SN- 10/244,747; No Copyright; Avail: CASI; A02, Hardcopy

ONLINE: http://hdl.handle.net/2060/20080018756

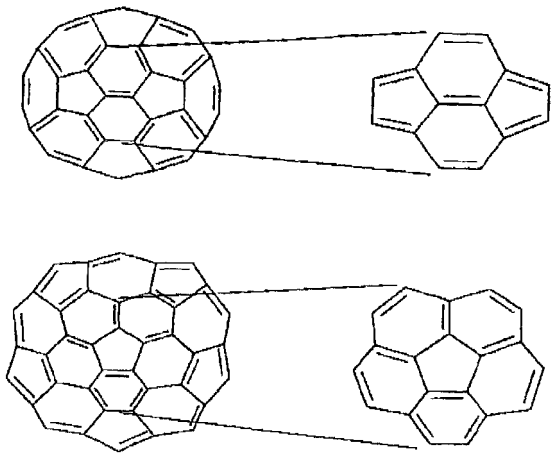

Trimetallic nitride endohedral metallofullerene derivatives and their preparation are described. The trimetallic nitride endohedral metallofullerene derivatives have the general formula A(sub 3-n)X(sub n)\@C(sub m)(R) where n ranges from 0 to 3, A and X may be trivalent metals and may be either rare earth metal or group IIIB metals, m is between about 60 and about 200, and R is preferably an organic group. Derivatives where the R group forms cyclized derivatives with the fullerene cage are also described.

Official Gazette of the U.S. Patent and Trademark Office

Fullerenes; Metal Nitrides

20080018821 Iowa State Univ. Research Foundation, Inc., Ames, IA USA

Cobalt ferrite based magnetostrictive materials for magnetic stress sensor and actuator applications

Jiles, David C., Inventor; Paulsen, Jason A., Inventor; Snyder, John E., Inventor; Lo, Chester C. H., Inventor; Ring, Andrew P., Inventor; Bormann, Keith A., Inventor; February 5, 2008; 18 pp.; In English

Contract(s)/Grant(s): NAG1-02098; Patent Info.: Filed July 23, 2004; US-Patent-7,326,360; US-Patent-Appl-SN-10/527,660; No Copyright; Avail: CASI; A03, Hardcopy

ONLINE: http://hdl.handle.net/2060/20080018821

Magnetostrictive material based on cobalt ferrite is described. The cobalt ferrite is substituted with transition metals (such manganese (Mn), chromium (Cr), zinc (Zn) and copper (Cu) or mixtures thereof) by substituting the transition metals for iron or cobalt to form substituted cobalt ferrite that provides mechanical properties that make the substituted cobalt ferrite material effective for use as sensors and actuators. The substitution of transition metals lowers the Curie temperature of the material (as compared to cobalt ferrite) while maintaining a suitable magnetostriction for stress sensing applications.

Official Gazette of the U.S. Patent and Trademark Office

Cobalt; Ferrites; Magnetic Materials; Magnetostriction; Transition Metals; Mechanical Properties

20080020430 NASA, Washington, DC USA

Silicon germanium semiconductive alloy and method of fabricating same

Park, Yeonjoon, Inventor; Choi, Sang H., Inventor; King, Glen C., Inventor; March 11, 2008; 6 pp.; In English

Patent Info.: Filed September 27, 2005; US-Patent-7,341,883; US-Patent-Appl-SN-11/242,415; No Copyright; Avail: CASI; A02, Hardcopy

ONLINE: http://hdl.handle.net/2060/20080020430

A silicon germanium (SiGe) semiconductive alloy is grown on a substrate of single crystalline Al.sub.2O.sub.3. A {111} crystal plane of a cubic diamond structure SiGe is grown on the substrate's {0001} C-plane such that a <110> orientation of the cubic diamond structure SiGe is aligned with a <1,0,-1,0> orientation of the {0001} C-plane. A lattice match between the substrate and the SiGe is achieved by using a SiGe composition that is 0.7223 atomic percent silicon and 0.2777 atomic percent germanium.

Official Gazette of the U.S. Patent and Trademark Office

Silicon Alloys; Germanium Alloys; Single Crystals; Substrates

20080025691 NASA, Washington, DC USA

Miniaturized metal (metal alloy)/ PdO.sub.x/SiC hydrogen and hydrocarbon gas sensors

Hunter, Gary W., Inventor; Xu, Jennifer C., Inventor; Lukco, Dorothy, Inventor; June 24, 2008; 18 pp.; In English

Patent Info.: Filed May 12, 2006; US-Patent-7,389,675; US-Patent-Appl-SN-11/434,578; No Copyright; Avail: CASI; A03, Hardcopy

ONLINE: http://hdl.handle.net/2060/20080025691

A miniaturized Schottky diode hydrogen and hydrocarbon sensor and the method of making same is disclosed and claimed. The sensor comprises a catalytic metal layer, such as palladium, a silicon carbide substrate layer and a thin barrier layer in between the catalytic and substrate layers made of palladium oxide (PdO.sub.x). This highly stable device provides sensitive gas detection at temperatures ranging from at least 450 to 600.degree. C. The barrier layer prevents reactions between the catalytic metal layer and the substrate layer. Conventional semiconductor fabrication techniques are used to fabricate the small-sized sensors. The use of a thicker palladium oxide barrier layer for other semiconductor structures such as a capacitor and transistor structures is also disclosed.
Official Gazette of the U.S. Patent and Trademark Office
Fabrication; Gas Detectors; Hydrogen; Miniaturization; Oxides; Palladium; Silicon Carbides

27
NONMETALLIC MATERIALS

Includes physical, chemical, and mechanical properties of plastics, elastomers, lubricants, polymers, textiles, adhesives, and ceramic materials. For composite materials see *24 Composite Materials*.

20080008720 FLX Micro, Inc., Cleveland, OH USA
Silicon carbide and other films and method of deposition
Mehregany, Mehran, Inventor; Zorman, Christian A., Inventor; Fu, Xiao-An, Inventor; Dunning, Jeremy L., Inventor; August 28, 2007; 13 pp.; In English
Contract(s)/Grant(s): NCA3-201; Patent Info.: Filed November 18, 2003; US-Patent-7,261,919; US-Patent-Appl-SN-10/716,006; No Copyright; Avail: CASI; A03, Hardcopy
ONLINE: http://hdl.handle.net/2060/20080008720
A method of depositing a ceramic film, particularly a silicon carbide film, on a substrate is disclosed in which the residual stress, residual stress gradient, and resistivity are controlled. Also disclosed are substrates having a deposited film with these controlled properties and devices, particularly MEMS and NEMS devices, having substrates with films having these properties.
Official Gazette of the U.S. Patent and Trademark Office
Ceramics; Microelectromechanical Systems; Electrical Resistivity; Residual Stress; Silicon Carbides; Stress Distribution; Silicon Films

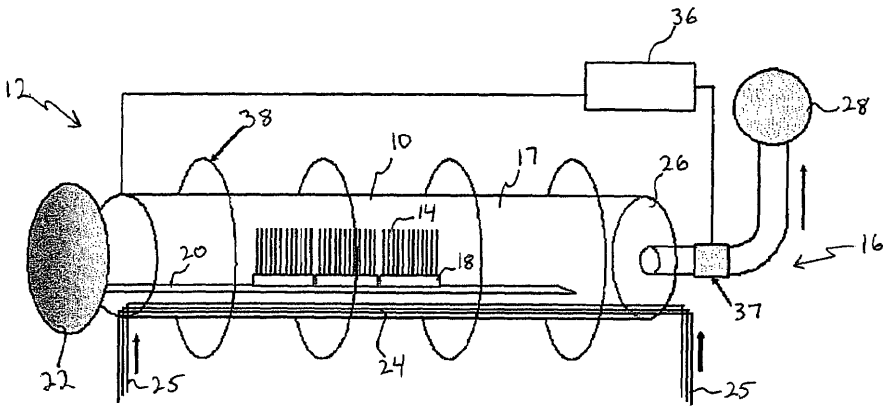

20080009438 Rice Univ., Houston, TX USA
Process for making polymers comprising derivatized carbon nanotubes and compositions thereof
Tour, James M., Inventor; Bahr, Jeffrey L., Inventor; Yang, Jiping, Inventor; December 4, 2007; 25 pp.; In English
Contract(s)/Grant(s): NCC9-77; Patent Info.: Filed August 1, 2003; US-Patent-7,304,103; US-Patent-Appl-SN-10/632,284; No Copyright; Avail: CASI; A03, Hardcopy
ONLINE: http://hdl.handle.net/2060/20080009438
The present invention incorporates new processes for blending derivatized carbon nanotubes into polymer matrices to create new polymer/composite materials. When modified with suitable chemical groups using diazonium chemistry, the nanotubes can be made chemically compatible with a polymer matrix, allowing transfer of the properties of the nanotubes (such as mechanical strength) to the properties of the composite material as a whole. To achieve this, the derivatized (modified) carbon nanotubes are physically blended with the polymeric material, and/or, if desired, allowed to react at ambient or elevated temperature. These methods can be utilized to append functionalities to the nanotubes that will further covalently bond to the

host polymer matrix, or directly between two tubes themselves. Furthermore, the nanotubes can be used as a generator of polymer growth, wherein the nanotubes are derivatized with a functional group that is an active part of a polymerization process, which would also result in a composite material in which the carbon nanotubes are chemically involved.
Official Gazette of the U.S. Patent and Trademark Office
Carbon Nanotubes; Composite Materials; Matrix Materials; Polymer Matrix Composites

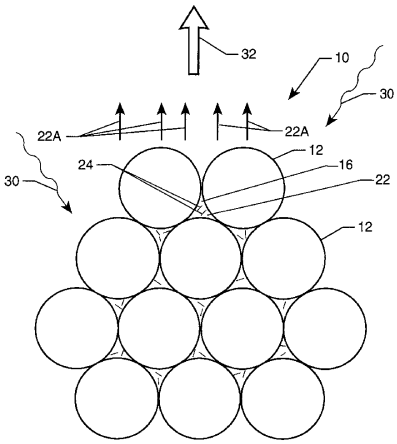

20080009452 NASA, Washington, DC USA
Carbon nanotube reinforced porous carbon having three-dimensionally ordered porosity and method of fabricating same
Su, Ji, Inventor; Huang, Ngan Fong, Inventor; August 7, 2007; 12 pp.; In English
Patent Info.: Filed July 25, 2005; US-Patent-7,252,884; US-Patent-Appl-SN-11/190,212; No Copyright; Avail: CASI; A03, Hardcopy
ONLINE: http://hdl.handle.net/2060/20080009452

A solid carbon has CNTs dispersed therein and is formed about three-dimensionally ordered spherical voids arranged in an opal-like lattice.
Official Gazette of the U.S. Patent and Trademark Office
Carbon; Carbon Nanotubes; Fabrication; Porosity

20080009629 NASA, Washington, DC USA
Process for self-repair of insulation material
Parrish, Clyde F., Inventor; October 23, 2007; 8 pp.; In English
Patent Info.: Filed October 8, 2003; US-Patent-7,285,306; US-Patent-Appl-SN-10/684,064; No Copyright; Avail: CASI; A02, Hardcopy
ONLINE: http://hdl.handle.net/2060/20080009629

A self-healing system for an insulation material initiates a self-repair process by rupturing a plurality of microcapsules disposed on the insulation material. When the plurality of microcapsules are ruptured reactants within the plurality of microcapsules react to form a replacement polymer in a break of the insulation material. This self-healing system has the ability to repair multiple breaks in a length of insulation material without exhausting the repair properties of the material.
Official Gazette of the U.S. Patent and Trademark Office
Insulation; Rupturing; Wear Resistance; Capsules

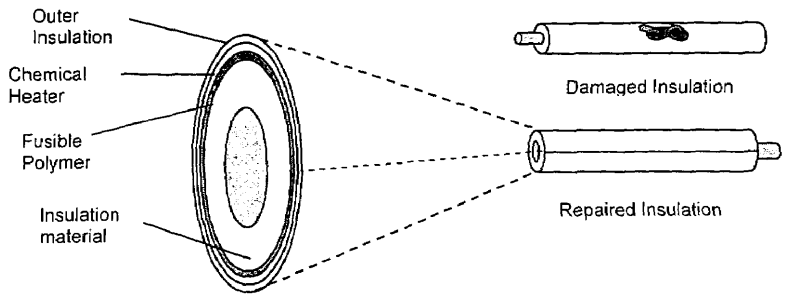

20080023615 Clemson Univ., Clemson, SC USA
Process for separating metallic from semiconducting single-walled carbon nanotubes
Sun, Ya-Ping, Inventor; May 20, 2008; 15 pp.; In English
Contract(s)/Grant(s): NCC1-01036; Patent Info.: Filed December 16, 2004; US-Patent-7,374,685; US-Patent-Appl-SN-11/013,900; No Copyright; Avail: CASI; A03, Hardcopy
ONLINE: http://hdl.handle.net/2060/20080023615

A method for separating semiconducting single-walled carbon nanotubes from metallic single-walled carbon nanotubes is disclosed. The method utilizes separation agents that preferentially associate with semiconducting nanotubes due to the electrical nature of the nanotubes. The separation agents are those that have a planar orientation, .pi.-electrons available for

association with the surface of the nanotubes, and also include a soluble portion of the molecule. Following preferential association of the separation agent with the semiconducting nanotubes, the agent/nanotubes complex is soluble and can be solubilized with the solution enriched in semiconducting nanotubes while the residual solid is enriched in metallic nanotubes.
Official Gazette of the U.S. Patent and Trademark Office
Carbon Nanotubes; Phase Separation (Materials); Semiconductors (Materials)

28
PROPELLANTS AND FUELS

Includes rocket propellants, igniters, and oxidizers; their storage and handling procedures; and aircraft fuels. For nuclear fuels see *73 Nuclear Physics*. For related information see also *07 Aircraft Propulsion and Power; 20 Spacecraft Propulsion and Power*; and *44 Energy Production and Conversion*.

20080009488 Ionfinity, LLC, Pasadena, CA USA
Fuel cell with ionization membrane
Hartley, Frank T., Inventor; April 24, 2007; 9 pp.; In English
Contract(s)/Grant(s): NAS7-1407; Patent Info.: Filed February 26, 2004; US-Patent-7,208,240; US-Patent-Appl-SN-10/786,232; No Copyright; Avail: CASI; A02, Hardcopy
ONLINE: http://hdl.handle.net/2060/20080009488

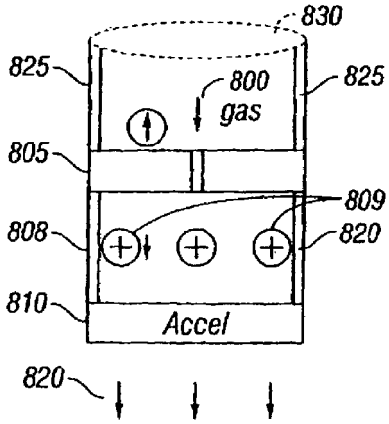

A fuel cell is disclosed comprising an ionization membrane having at least one area through which gas is passed, and which ionizes the gas passing therethrough, and a cathode for receiving the ions generated by the ionization membrane. The ionization membrane may include one or more openings in the membrane with electrodes that are located closer than a mean free path of molecules within the gas to be ionized. Methods of manufacture are also provided.
Official Gazette of the U.S. Patent and Trademark Office
Fuel Cells; Gas Ionization; Membranes

31
ENGINEERING (GENERAL)

Includes general research topics related to engineering and applied physics, and particular areas of vacuum technology, industrial engineering, cryogenics, and fire prevention. For specific topics in engineering see *categories 32 through 39*.

20080009463 California Inst. of Tech., Pasadena, CA USA
Detection and enforcement of failure-to-yield in an emergency vehicle preemption system
Bachelder, Aaron, Inventor; Wickline, Richard, Inventor; July 24, 2007; 13 pp.; In English
Patent Info.: Filed October 6, 2004; US-Patent-7,248,149; US-Patent-Appl-SN-10/960,129; No Copyright; Avail: CASI; A03, Hardcopy
ONLINE: http://hdl.handle.net/2060/20080009463

An intersection controlled by an intersection controller receives trigger signals from on-coming emergency vehicles responding to an emergency call. The intersection controller initiates surveillance of the intersection via cameras installed at the intersection in response to a received trigger signal. The surveillance may begin immediately upon receipt of the trigger signal from an emergency vehicle, or may wait until the intersection controller determines that the signaling emergency vehicle is in the field of view of the cameras at the intersection. Portions of the captured images are tagged by the intersection controller based on tag signals transmitted by the vehicle or based on detected traffic patterns that indicate a potential traffic violation. The captured images are downloaded to a processing facility that analyzes the images and automatically issues citations for captured traffic violations.
Official Gazette of the U.S. Patent and Trademark Office
Actuators; Controllers; Traffic Control; Emergencies

20080009631 NASA, Washington, DC USA
Cushion system for multi-use child safety seat
Dabney, Richard W., Inventor; Elrod, Susan V., Inventor; October 23, 2007; 7 pp.; In English
Patent Info.: Filed January 28, 2005; US-Patent-7,284,792; US-Patent-Appl-SN-11/047,342; No Copyright; Avail: CASI; A02, Hardcopy
ONLINE: http://hdl.handle.net/2060/20080009631

A cushion system for use with a child safety seat has a plurality of bladders assembled to form a seat cushion that cooperates with the seat's safety harness. One or more sensors coupled to the safety harness sense tension therein and generate a signal indicative of the tension. Each of the bladders is individually pressurized by a pressurization system to define a support configuration of the seat cushion. The pressurization system is disabled when tension in the safety harness has attained a threshold level.
Official Gazette of the U.S. Patent and Trademark Office
Cushions; Inflatable Structures; Harnesses; Safety; Seats

20080018820 NASA, Washington, DC USA
Devices and methods of operation thereof for providing stable flow for centrifugal compressors
Skoch, Gary J., Inventor; Stevens, Mark A., Inventor; Jett, Thomas A., Inventor; February 5, 2008; 26 pp.; In English
Patent Info.: Filed May 25, 2004; US-Patent-7,326,027; US-Patent-Appl-SN-10/856,361; No Copyright; Avail: CASI; A03, Hardcopy
ONLINE: http://hdl.handle.net/2060/20080018820

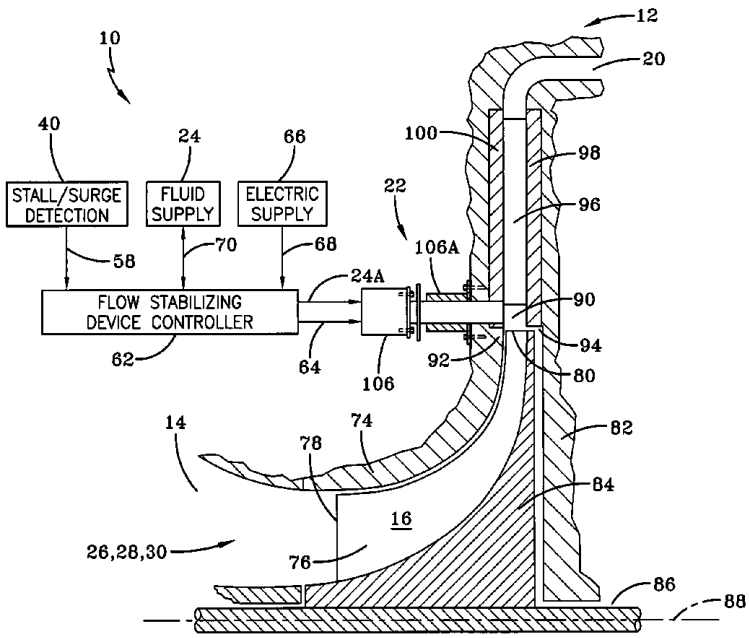

Centrifugal compressor flow stabilizing devices and methods of operation thereof are disclosed that act upon the flow field discharging from the impeller of a centrifugal compressor and modify the flow field ahead of the diffuser vanes such that flow conditions contributing to rotating stall and surge are reduced or even eliminated. In some embodiments, shaped rods and methods of operation thereof are disclosed, whereas in other embodiments reverse-tangent air injection devices and methods are disclosed.
Official Gazette of the U.S. Patent and Trademark Office
Centrifugal Compressors; Flow Distribution; Stabilization

20080020441 Boeing Co., Chicago, IL USA
Integral resonator gyroscope
Shcheglov, Kirill V., Inventor; Challoner, A. Dorian, Inventor; Hayworth, Ken J., Inventor; Wiberg, Dean V., Inventor; Yee, Karl Y., Inventor; March 25, 2008; 47 pp.; In English
Patent Info.: Filed August 8, 2005; US-Patent-7,347,095; US-Patent-Appl-SN-11/199,004; No Copyright; Avail: CASI; A03, Hardcopy
ONLINE: http://hdl.handle.net/2060/20080020441

The present invention discloses an inertial sensor having an integral resonator. A typical sensor comprises a planar mechanical resonator for sensing motion of the inertial sensor and a case for housing the resonator. The resonator and a wall of the case are defined through an etching process. A typical method of producing the resonator includes etching a baseplate, bonding a wafer to the etched baseplate, through etching the wafer to form a planar mechanical resonator and the wall of the case and bonding an end cap wafer to the wall to complete the case.
Official Gazette of the U.S. Patent and Trademark Office
Resonators; Gyroscopes; Detection; Bonding; Etching

32
COMMUNICATIONS AND RADAR

Includes radar; radio, wire, and optical communications; land and global communications; communications theory. For related information see also 04 Aircraft Communications and Navigation; and *17 Space Communications, Spacecraft Communications, Command and Tracking*; for search and rescue, see *03 Air Transportation and Safety*; and *16 Space Transportation and Safety*.

20080008714 California Inst. of Tech., Pasadena, CA USA
Roadside-based communication system and method
Bachelder, Aaron D., Inventor; September 4, 2007; 12 pp.; In English
Patent Info.: Filed August 18, 2005; US-Patent-7,265,683; US-Patent-Appl-SN-11/208,243; No Copyright; Avail: CASI; A03, Hardcopy
ONLINE: http://hdl.handle.net/2060/20080008714

A roadside-based communication system providing backup communication between emergency mobile units and emergency command centers. In the event of failure of a primary communication, the mobile units transmit wireless messages to nearby roadside controllers that may take the form of intersection controllers. The intersection controllers receive the wireless messages, convert the messages into standard digital streams, and transmit the digital streams along a citywide network to a destination intersection or command center.
Official Gazette of the U.S. Patent and Trademark Office
Communication Equipment; Emergencies; Roads

20080009437 Cornell Univ., Ithaca, NY USA
Real-time software receiver
Ledvina, Brent M., Inventor; Psiaki, Mark L., Inventor; Powell, Steven P., Inventor; Kintner, Jr., Paul M., Inventor; December 4, 2007; 36 pp.; In English
Contract(s)/Grant(s): NCC5-563; NAG5-11819; NAG5-12089; Patent Info.: Filed December 22, 2005; US-Patent-7,305,021; US-Patent-Appl-SN-11/316,536; No Copyright; Avail: CASI; A03, Hardcopy
ONLINE: http://hdl.handle.net/2060/20080009437

A real-time software receiver that executes on a general purpose processor. The software receiver includes data acquisition and correlator modules that perform, in place of hardware correlation, baseband mixing and PRN code correlation using bit-wise parallelism.
Official Gazette of the U.S. Patent and Trademark Office
Real Time Operation; Radio Receivers; Computation; Global Positioning System

20080009445 Lockheed Martin Corp., Bethesda, MD USA
System and method for transferring data on a data link
Cole, Robert M., Inventor; Bishop, James E., Inventor; November 13, 2007; 16 pp.; In English
Contract(s)/Grant(s): NAS9-20000; Patent Info.: Filed January 22, 2003; US-Patent-7,296,211; US-Patent-Appl-SN-10/348,659; No Copyright; Avail: CASI; A03, Hardcopy
ONLINE: http://hdl.handle.net/2060/20080009445

A system and method are provided for transferring a packet across a data link. The packet may include a stream of data symbols which is delimited by one or more framing symbols. Corruptions of the framing symbol which result in valid data symbols may be mapped to invalid symbols. If it is desired to transfer one of the valid data symbols that has been mapped to an invalid symbol, the data symbol may be replaced with an unused symbol. At the receiving end, these unused symbols are replaced with the corresponding valid data symbols. The data stream of the packet may be encoded with forward error correction information to detect and correct errors in the data stream.
Official Gazette of the U.S. Patent and Trademark Office
Data Links; Packets (Communication); Data Transmission

20080009479 Boeing Co., Chicago, IL USA

Method and systems for a radiation tolerant bus interface circuit

Kinstler, Gary A., Inventor; June 5, 2007; 22 pp.; In English

Contract(s)/Grant(s): NAS8-01099; Patent Info.: Filed March 30, 2004; US-Patent-7,228,442; US-Patent-Appl-SN-10/813,152; No Copyright; Avail: CASI; A03, Hardcopy

ONLINE: http://hdl.handle.net/2060/20080009479

A bus management tool that allows communication to be maintained between a group of nodes operatively connected on two busses in the presence of radiation by transmitting periodically a first message from one to another of the nodes on one of the busses, determining whether the first message was received by the other of the nodes on the first bus, and when it is determined that the first message was not received by the other of the nodes, transmitting a recovery command to the other of the nodes on a second of the of busses. Methods, systems, and articles of manufacture consistent with the present invention also provide for a bus recovery tool on the other node that re-initializes a bus interface circuit operatively connecting the other node to the first bus in response to the recovery command.

Official Gazette of the U.S. Patent and Trademark Office

Circuits; Communication Equipment; Transmission; Bus Conductors; Interfaces

20080009487 Purdue Research Foundation, Lafayette, IN USA

Communication system with adaptive noise suppression

Kozel, David, Inventor; Devault, James A., Inventor; Birr, Richard B., Inventor; April 24, 2007; 15 pp.; In English

Patent Info.: Filed March 10, 2003; US-Patent-7,209,567; US-Patent-Appl-SN-10/390,259; No Copyright; Avail: CASI; A03, Hardcopy

ONLINE: http://hdl.handle.net/2060/20080009487

A signal-to-noise ratio dependent adaptive spectral subtraction process eliminates noise from noise-corrupted speech signals. The process first pre-emphasizes the frequency components of the input sound signal which contain the consonant information in human speech. Next, a signal-to-noise ratio is determined and a spectral subtraction proportion adjusted appropriately. After spectral subtraction, low amplitude signals can be squelched. A single microphone is used to obtain both the noise-corrupted speech and the average noise estimate. This is done by determining if the frame of data being sampled is a voiced or unvoiced frame. During unvoiced frames an estimate of the noise is obtained. A running average of the noise is used to approximate the expected value of the noise. Spectral subtraction may be performed on a composite noise-corrupted signal, or upon individual sub-bands of the noise-corrupted signal. Pre-averaging of the input signal's magnitude spectrum over multiple time frames may be performed to reduce musical noise.

Official Gazette of the U.S. Patent and Trademark Office

Noise Reduction; Signal Processing; Signal to Noise Ratios

20080009490 Johns Hopkins Univ., Baltimore, MD USA

Method of remotely estimating a rest or best lock frequency of a local station receiver using telemetry

Fielhauer, Karl B., Inventor; Jensen, James R., Inventor; April 17, 2007; 14 pp.; In English

Contract(s)/Grant(s): NAS5-97271; Patent Info.: Filed December 12, 2003; US-Patent-7,206,575; US-Patent-Appl-SN-10/735,580; No Copyright; Avail: CASI; A03, Hardcopy

ONLINE: http://hdl.handle.net/2060/20080009490

A system includes a remote station and a local station having a receiver. The receiver operates in an unlocked state corresponding to its best lock frequency (BLF). The local station derives data indicative of a ratio of the BLF to a reference frequency of the receiver, and telemeters the data to the remote station. The remote station estimates the BLF based on (i) the telemetered data, and (ii) a predetermined estimate of the reference frequency.

Official Gazette of the U.S. Patent and Trademark Office

Estimating; Frequencies; Receivers; Telemetry

20080009512 California Inst. of Tech., Pasadena, CA USA

Generating high precision ionospheric ground-truth measurements

Komjathy, Attila, Inventor; Sparks, Lawrence, Inventor; Mannucci, Anthony J., Inventor; October 30, 2007; 20 pp.; In English

Patent Info.: Filed July 22, 2005; US-Patent-7,289,061; US-Patent-Appl-SN-11/187,244; No Copyright; Avail: CASI; A03, Hardcopy

ONLINE: http://hdl.handle.net/2060/20080009512

A method, apparatus and article of manufacture provide ionospheric ground-truth measurements for use in a wide-area augmentation system (WAAS). Ionospheric pseudorange/code and carrier phase data as primary observables is received by a WAAS receiver. A polynomial fit is performed on the phase data that is examined to identify any cycle slips in the phase data. The phase data is then leveled. Satellite and receiver biases are obtained and applied to the leveled phase data to obtain unbiased phase-leveled ionospheric measurements that are used in a WAAS system. In addition, one of several measurements may be selected and data is output that provides information on the quality of the measurements that are used to determine corrective messages as part of the WAAS system.

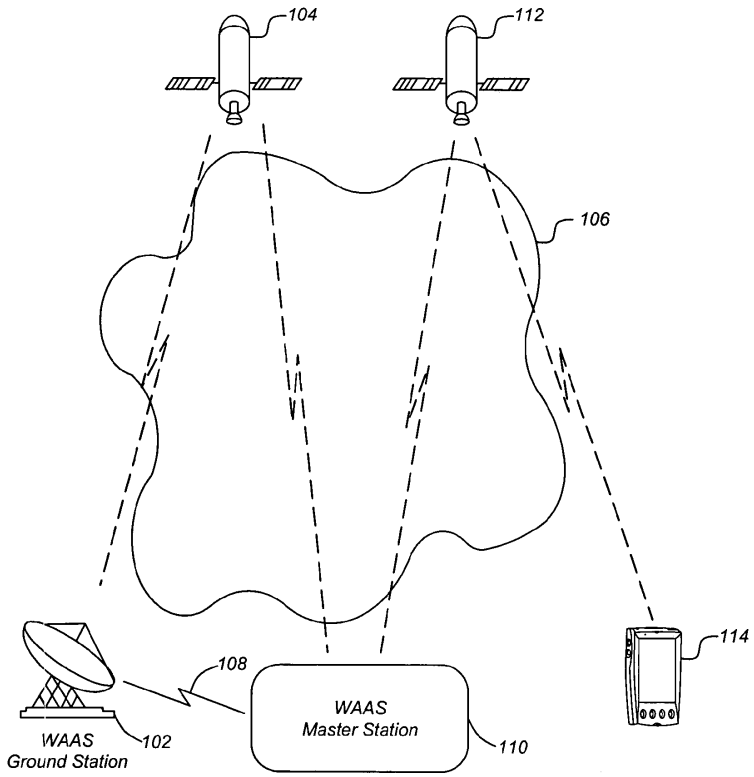

Official Gazette of the U.S. Patent and Trademark Office

Augmentation; Ground Truth; Ionospheres

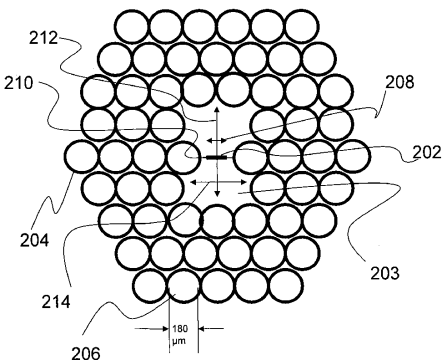

20080018812 California Inst. of Tech., Pasadena, CA USA

Method and apparatus for low-loss signal transmission

Siegel, Peter, Inventor; Yeh, Cavour, Inventor; Shimabukuro, Fred, Inventor; Fraser, Scott, Inventor; January 1, 2008; 13 pp.; In English

Patent Info.: Filed December 13, 2005; US-Patent-7,315,678; US-Patent-Appl-SN-11/300,639; No Copyright; Avail: CASI; A03, Hardcopy

ONLINE: http://hdl.handle.net/2060/20080018812

The present invention relates to the field of radio-frequency (RF) waveguides. More specifically, the present invention pertains to a method and apparatus that provides ultra-low-loss RF waveguide structures targeted between approximately 300 GHz and approximately 30 THz. The RF waveguide includes a hollow core and a flexible honeycomb, periodic-bandgap structure surrounding the hollow core. The flexible honeycomb, periodic-bandgap structure is formed of a plurality of tubes formed of a dielectric material such as of low-loss quartz, polyethylene, or high-resistivity silicon. Using the RF waveguide, a user may attach a terahertz signal source to the waveguide and pass signals through the waveguide, while a terahertz signal receiver receives the signals.

Official Gazette of the U.S. Patent and Trademark Office

Radio Frequencies; Dielectrics; Energy Gaps (Solid State); Signal Transmission; Receivers

20080020427 Honeywell International, Inc., Morristown, NJ USA

Low power switching for antenna reconfiguration

Bauhahn, Paul E., Inventor; Becker, Robert C., Inventor; Meyers, David W., Inventor; Muldoon, Kelly P., Inventor; February 26, 2008; 12 pp.; In English

Patent Info.: Filed October 18, 2005; US-Patent-7,335,871; US-Patent-Appl-SN-11/253,188; No Copyright; Avail: CASI; A03, Hardcopy

ONLINE: http://hdl.handle.net/2060/20080020427

Methods and systems for low power switching are provided. In one embodiment, an optical switching system is provided. The system comprises at least one optically controlled switch adapted to maintain one of an open state and a closed state based on an associated light signal; and at least one light source adapted to output the associated light signal to the at least one switch, wherein the at least one light source cycles the light signal on and off, wherein the at least one light source is cycled on for a sufficient duration of time and with a sufficient periodicity to maintain the optically controlled switch in one of an open state and a closed state.
Official Gazette of the U.S. Patent and Trademark Office
Optical Switching; Antenna Design; Periodic Variations; Cycles

20080025657 University of South Florida, Tampa, FL USA
Dual-polarized feed antenna apparatus and method of use
Sarehraz, Mohammad, Inventor; Buckle, Kenneth A., Inventor; Stefanakos, Elias, Inventor; Weller, Thomas, Inventor; Goswami, D. Yogi, Inventor; April 22, 2008; 9 pp.; In English
Patent Info.: Filed September 25, 2006; US-Patent-7,362,273; US-Patent-Appl-SN-11/534,781; No Copyright; Avail: CASI; A02, Hardcopy
ONLINE: http://hdl.handle.net/2060/20080025657

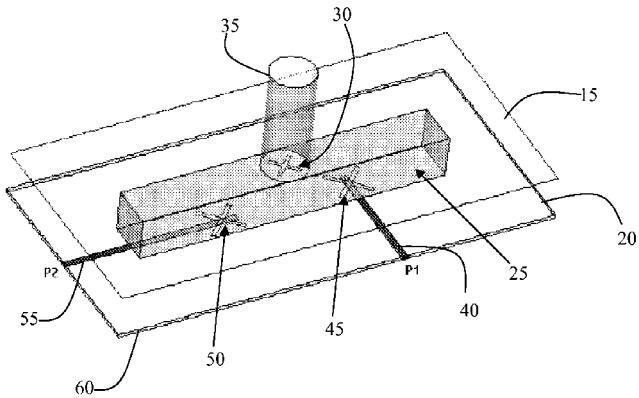

An antenna apparatus and method for the interception of randomly polarized electromagnetic waves utilizing a dual polarized antenna which is excited through a cross-slot aperture using two well-isolated orthogonal feeds.
Official Gazette of the U.S. Patent and Trademark Office
Electromagnetic Radiation; Apertures; Interception; Slots

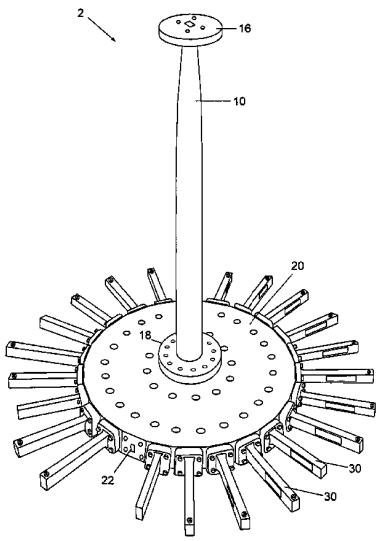

20080025693 NASA, Washington, DC USA
Wideband radial power combiner/divider fed by a mode transducer
Epp, Larry W., Inventor; Hoppe, Daniel J., Inventor; Kelley, Daniel, Inventor; Khan, Abdur R., Inventor; June 10, 2008; 15 pp.; In English
Patent Info.: Filed March 14, 2006; US-Patent-7,385,462; US-Patent-Appl-SN-11/376,638; No Copyright; Avail: CASI; A03, Hardcopy
ONLINE: http://hdl.handle.net/2060/20080025693

A radial power combiner/divider capable of a higher order (for example, N=24) of power combining/dividing and a 15% bandwidth (31 to 36 GHz). The radial power combiner/divider generally comprises an axially-oriented mode transducer coupled to a radial base. The mode transducer transduces circular TE01 waveguide into rectangular TE10 waveguide, and the unique radial base combines/divides a plurality of peripheral rectangular waveguide ports into a single circular TE01 waveguide end of the transducer. The radial base incorporates full-height waveguides that are stepped down to reduced-height waveguides to form a stepped-impedance configuration, thereby reducing the height of the waveguides inside the base and increasing the order N of combining/dividing. The reduced-height waveguides in the base converge radially to a matching post at the bottom center of the radial base which matches the reduced height rectangular waveguides into the circular waveguide that feeds the mode transducer.
Official Gazette of the U.S. Patent and Trademark Office
Broadband; Transducers

20080031681 NASA Ames Research Center, Moffett Field, CA, USA
Reconfigurable Auditory-Visual Display
Begault, Durand R., Inventor; Anderson, Mark R., Inventor; McClain, Bryan, Inventor; Miller, Joel D., Inventor; May 27, 2008; 17 pp.; In English; Original contains black and white illustrations
Patent Info.: Filed 20 Sep. 2005; US-Patent 7,378,963; NASA-Case-ARC-15315-1; US-Patent-Appl-SN-11/239449; No Copyright; Avail: CASI; A03, Hardcopy
ONLINE: http://hdl.handle.net/2060/20080031681

System and method for visual and audible communication between a central operator and N mobile communicators (N greater than or equal to 2), including an operator transceiver and interface, configured to receive and display, for the operator, visually perceptible and audibly perceptible signals from each of the mobile communicators. The interface (1) presents an audible signal from each communicator as if the audible signal is received from a different location relative to the operator and (2) allows the operator to select, to assign priority to, and to display, the visual signals and the audible signals received from a specified communicator. Each communicator has an associated signal transmitter that is configured to transmit at least one of the visual signals and the audio signal associated with the communicator, where at least one of the signal transmitters includes at least one sensor that senses and transmits a sensor value representing a selected environmental or physiological parameter associated with the communicator.
Author
Signal Detection; Visual Signals; Auditory Signals; Wireless Communication; Situational Awareness; Display Devices

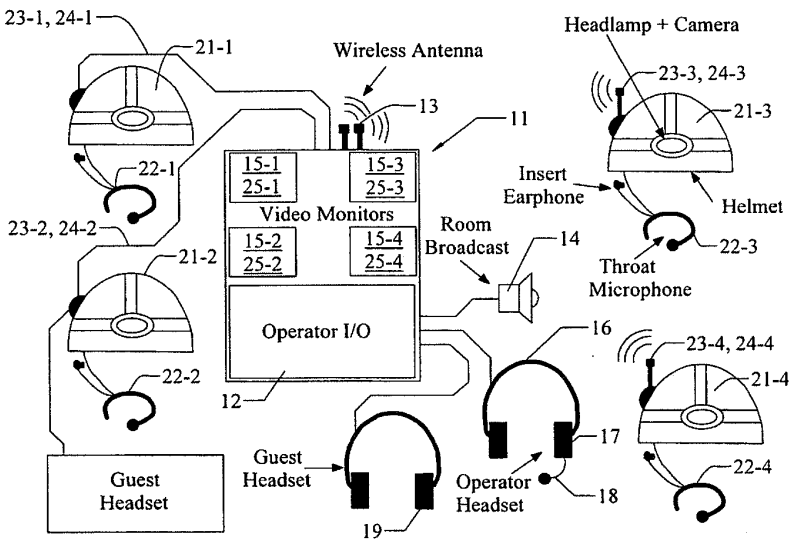

33
ELECTRONICS AND ELECTRICAL ENGINEERING

Includes development, performance, and maintainability of electrical/electronic devices and components; related test equipment; and microelectronics and integrated circuitry. for related information see also *60 Computer Operations and Hardware*; and *76 Solid-State Physics*. For communications equipment and devices see *32 Communications and Radar*.

20080008715 NASA, Washington, DC USA
MEMS micro-translation device with improved linear travel capability
Abushagur, Mustafa A. G., Inventor; Ferguson, Cynthia K., Inventor; Nordin, Gregory P., Inventor; English, Jennifer M., Inventor; September 4, 2007; 12 pp.; In English
Patent Info.: Filed October 26, 2004; US-Patent-7,265,476; US-Patent-Appl-SN-10/975,121; No Copyright; Avail: CASI; A03, Hardcopy
ONLINE: http://hdl.handle.net/2060/20080008715
A microscopic translation device for a microelectromechanical system includes a pair of linear stator assemblies disposed in spaced relation to define an elongate channel. Each assembly is formed by a plurality of stators arranged in a row along the channel. A shuttle member is disposed between the stator assemblies for translating movement along the channel. The shuttle member includes a plurality of rotors extending outwardly from opposite sides. The shuttle is grounded through the stator assemblies and includes a mounting area for an object to be translated. Electrical lines are individually connected to alternate stators of a plurality of groups of the stators. A current supply sequentially supplies current through the electrical lines to the alternate stators so as to effect charging of the stators in a predetermined sequence. This produces a tangential capacitive force that causes translation of the shuttle.
Official Gazette of the U.S. Patent and Trademark Office
Elongation; Microelectromechanical Systems; Stators; Capacitance

20080008723 NASA, Washington, DC USA
Hybrid power management system and method
Eichenberg, Dennis J., Inventor; August 21, 2007; 8 pp.; In English
Patent Info.: Filed September 1, 2004; US-Patent-7,259,692; US-Patent-Appl-SN-10/931,205; No Copyright; Avail: CASI; A02, Hardcopy
ONLINE: http://hdl.handle.net/2060/20080008723

A system and method for hybrid power management. The system includes photovoltaic cells, ultracapacitors, and pulse generators. In one embodiment, the hybrid power management system is used to provide power for a highway safety flasher.
Official Gazette of the U.S. Patent and Trademark Office
Management Systems; Photovoltaic Cells; Electrochemical Capacitors; Pulse Generators

20080009443 California Inst. of Tech., Pasadena, CA USA
Flexible carbon-based ohmic contacts for organic transistors
Brandon, Erik, Inventor; November 20, 2007; 12 pp.; In English
Patent Info.: Filed April 15, 2004; US-Patent-7,297,621; US-Patent-Appl-SN-10/826,140; No Copyright; Avail: CASI; A03, Hardcopy
ONLINE: http://hdl.handle.net/2060/20080009443

The present invention relates to a system and method of organic thin-film transistors (OTFTs). More specifically, the present invention relates to employing a flexible, conductive particle-polymer composite material for ohmic contacts (i.e. drain and source).
Official Gazette of the U.S. Patent and Trademark Office
Carbon; Thin Films; Transistors; Polymer Matrix Composites

20080009464 STAR Cryoelectronics, LLC, Los Alamos, NM USA
Charge dissipative dielectric for cryogenic devices
Cantor, Robin Harold, Inventor; Hall, John Addison, Inventor; July 24, 2007; 11 pp.; In English
Contract(s)/Grant(s): NAS5-00236; NAS5-00237; Patent Info.: Filed October 20, 2004; US-Patent-7,247,603; US-Patent-Appl-SN-10/970,539; No Copyright; Avail: CASI; A03, Hardcopy
ONLINE: http://hdl.handle.net/2060/20080009464

A Superconducting Quantum Interference Device (SQUID) is disclosed comprising a pair of resistively shunted Josephson junctions connected in parallel within a superconducting loop and biased by an external direct current (dc) source. The SQUID comprises a semiconductor substrate and at least one superconducting layer. The metal layer(s) are separated by or covered with a semiconductor material layer having the properties of a conductor at room temperature and the properties of an insulator at operating temperatures (generally less than 100 Kelvins). The properties of the semiconductor material layer greatly reduces the risk of electrostatic discharge that can damage the device during normal handling of the device at room temperature, while still providing the insulating properties desired to allow normal functioning of the device at its operating temperature. A method of manufacturing the SQUID device is also disclosed.
Official Gazette of the U.S. Patent and Trademark Office
Cryogenics; Dielectrics; Josephson Junctions; SQUID (Detectors); Superconductivity

20080009471 Alliant Techsystems, Inc., Edina, MN USA
Method and apparatus for detecting and determining event characteristics with reduced data collection
Totman, Peter D., Inventor; Everton, Randy L., Inventor; Egget, Mark R., Inventor; Macon, David J., Inventor; July 10, 2007; 13 pp.; In English
Contract(s)/Grant(s): NAS8-97238; Patent Info.: Filed July 30, 2002; US-Patent-7,240,564; US-Patent-Appl-SN-10/208,518; No Copyright; Avail: CASI; A03, Hardcopy
ONLINE: http://hdl.handle.net/2060/20080009471

A method and apparatus for detecting and determining event characteristics such as, for example, the material failure of a component, in a manner which significantly reduces the amount of data collected. A sensor array, including a plurality of individual sensor elements, is coupled to a programmable logic device (PLD) configured to operate in a passive state and an active state. A triggering event is established such that the PLD records information only upon detection of the occurrence of the triggering event which causes a change in state within one or more of the plurality of sensor elements. Upon the occurrence of the triggering event, the change in state of the one or more sensor elements causes the PLD to record in memory which

sensor element detected the event and at what time the event was detected. The PLD may be coupled with a computer for subsequent downloading and analysis of the acquired data.
Official Gazette of the U.S. Patent and Trademark Office
Data Acquisition; Failure Analysis; Programmable Logic Devices

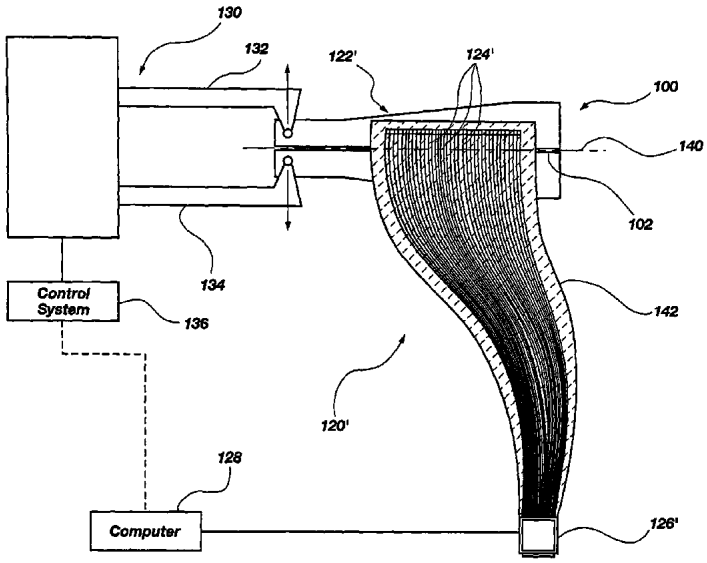

20080009474 California Inst. of Tech., Pasadena, CA USA
Wafer bonded virtual substrate and method for forming the same
Atwater, Jr., Harry A., Inventor; Zahler, James M., Inventor; Morral, Anna Fontcuberta i, Inventor; July 3, 2007; 17 pp.; In English
Contract(s)/Grant(s): NAS3-02201; Patent Info.: Filed January 20, 2004; US-Patent-7,238,622; US-Patent-Appl-SN-10/761,918; No Copyright; Avail: CASI; A03, Hardcopy
ONLINE: http://hdl.handle.net/2060/20080009474

A method of forming a virtual substrate comprised of an optoelectronic device substrate and handle substrate comprises the steps of initiating bonding of the device substrate to the handle substrate, improving or increasing the mechanical strength of the device and handle substrates, and thinning the device substrate to leave a single-crystal film on the virtual substrate such as by exfoliation of a device film from the device substrate. The handle substrate is typically Si or other inexpensive common substrate material, while the optoelectronic device substrate is formed of more expensive and specialized electro-optic material. Using the methodology of the invention a wide variety of thin film electro-optic materials of high quality can be bonded to inexpensive substrates which serve as the mechanical support for an optoelectronic device layer fabricated in the thin film electro-optic material.
Official Gazette of the U.S. Patent and Trademark Office
Bonding; Optoelectronic Devices; Substrates; Wafers

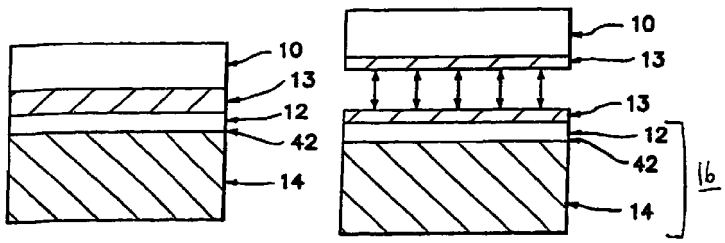

20080009476 California Inst. of Tech., Pasadena, CA USA
Increasing the dynamic range of CMOS photodiode imagers
Pain, Bedabrata, Inventor; Cunningham, Thomas J., Inventor; Hancock, Bruce R., Inventor; June 26, 2007; 11 pp.; In English
Patent Info.: Filed July 27, 2005; US-Patent-7,235,771; US-Patent-Appl-SN-11/191,603; No Copyright; Avail: CASI; A03, Hardcopy
ONLINE: http://hdl.handle.net/2060/20080009476

A multiple-step reset process and circuit for resetting a voltage stored on a photodiode of an imaging device. A first stage of the reset occurs while a source and a drain of a pixel source-follower transistor are held at ground potential and the photodiode and a gate of the pixel source-follower transistor are charged to an initial reset voltage having potential less that of a supply voltage. A second stage of the reset occurs after the initial reset voltage is stored on the photodiode and the gate of the pixel source-follower transistor and the source and drain voltages of the pixel source-follower transistor are released from ground potential thereby allowing the source and drain voltages of the pixel source-follower transistor to assume ordinary values above ground potential and resulting in a capacitive feed-through effect that increases the voltage on the photodiode to a value greater than the initial reset voltage.
Official Gazette of the U.S. Patent and Trademark Office
Energy Storage; CMOS; Dynamic Range; Electric Potential; Imaging Techniques; Photodiodes

20080009484 Auburn Univ., AL USA
Graded junction termination extensions for electronic devices
Merrett, J. Neil, Inventor; Isaacs-Smith, Tamara, Inventor; Sheridan, David C., Inventor; Williams, John R., Inventor; May 8, 2007; 10 pp.; In English
Contract(s)/Grant(s): NAGW-1192; Patent Info.: Filed August 9, 2005; US-Patent-7,214,627; US-Patent-Appl-SN-11/201,066; No Copyright; Avail: CASI; A02, Hardcopy
ONLINE: http://hdl.handle.net/2060/20080009484
A graded junction termination extension in a silicon carbide (SiC) semiconductor device and method of its fabrication using ion implementation techniques is provided for high power devices. The properties of silicon carbide (SiC) make this wide band gap semiconductor a promising material for high power devices. This potential is demonstrated in various devices such as p-n diodes, Schottky diodes, bipolar junction transistors, thyristors, etc. These devices require adequate and affordable termination techniques to reduce leakage current and increase breakdown voltage in order to maximize power handling capabilities. The graded junction termination extension disclosed is effective, self-aligned, and simplifies the implementation process.
Official Gazette of the U.S. Patent and Trademark Office
Fabrication; Semiconductor Devices; Silicon Carbides; P-N Junctions; Semiconductor Diodes

20080009485 NASA, Washington, DC USA
String resistance detector
Hall, A. Daniel, Inventor; Davies, Francis J., Inventor; May 1, 2007; 16 pp.; In English
Patent Info.: Filed March 6, 2006; US-Patent-7,212,934; US-Patent-Appl-SN-11/370,379; No Copyright; Avail: CASI; A03, Hardcopy
ONLINE: http://hdl.handle.net/2060/20080009485
Method and system are disclosed for determining individual string resistance in a network of strings when the current through a parallel connected string is unknown and when the voltage across a series connected string is unknown. The method/system of the invention involves connecting one or more frequency-varying impedance components with known electrical characteristics to each string and applying a frequency-varying input signal to the network of strings. The frequency-varying impedance components may be one or more capacitors, inductors, or both, and are selected so that each string is uniquely identifiable in the output signal resulting from the frequency-varying input signal. Numerical methods, such as non-linear regression, may then be used to resolve the resistance associated with each string.
Official Gazette of the U.S. Patent and Trademark Office
Electric Potential; Strings

20080009486 Florida Univ., Gainesville, FL USA
Electromechanical acoustic liner
Sheplak, Mark, Inventor; Cattafesta, III, Louis N., Inventor; Nishida, Toshikazu, Inventor; Horowitz, Stephen Brian, Inventor; May 1, 2007; 19 pp.; In English
Contract(s)/Grant(s): NAG1-2261; Patent Info.: Filed August 16, 2004; US-Patent-7,212,641; US-Patent-Appl-SN-10/919,150; No Copyright; Avail: CASI; A03, Hardcopy
ONLINE: http://hdl.handle.net/2060/20080009486
A multi-resonator-based system responsive to acoustic waves includes at least two resonators, each including a bottom plate, side walls secured to the bottom plate, and a top plate disposed on top of the side walls. The top plate includes an orifice so that a portion of an incident acoustical wave compresses gas in the resonators. The bottom plate or the side walls include at least one compliant portion. A reciprocal electromechanical transducer coupled to the compliant portion of each of the

resonators forms a first and second transducer/compliant composite. An electrical network is disposed between the reciprocal electromechanical transducer of the first and second resonator.
Official Gazette of the U.S. Patent and Trademark Office
Electromechanics; Resonators; Sound Generators; Sound Waves; Walls

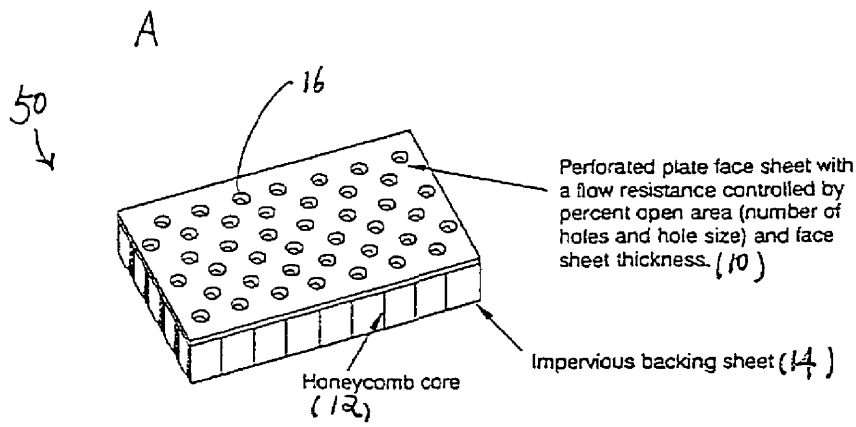

20080009502 NASA, Washington, DC USA
Low power, high voltage power supply with fast rise/fall time
Bearden, Douglas B., Inventor; February 13, 2007; 6 pp.; In English
Patent Info.: Filed March 10, 2006; US-Patent-7,177,164; US-Patent-Appl-SN-11/376,632; No Copyright; Avail: CASI; A02, Hardcopy
ONLINE: http://hdl.handle.net/2060/20080009502

A low power, high voltage power supply system includes a high voltage power supply stage and a preregulator for programming the power supply stage so as to produce an output voltage which is a predetermined fraction of a desired voltage level. The power supply stage includes a high voltage, voltage doubler stage connected to receive the output voltage from the preregulator and for, when activated, providing amplification of the output voltage to the desired voltage level. A first feedback loop is connected between the output of the preregulator and an input of the preregulator while a second feedback loop is connected between the output of the power supply stage and the input of the preregulator.
Official Gazette of the U.S. Patent and Trademark Office
Electric Potential; High Voltages; Low Voltage

20080009515 Illinois Inst. of Tech., Chicago, IL USA
Electrode design for electrohydrodynamic conduction pumping
Yagoobi, Jamal Seyed, Inventor; August 28, 2007; 16 pp.; In English
Patent Info.: Filed June 16, 2003; US-Patent-7,261,521; US-Patent-Appl-SN-10/504,996; No Copyright; Avail: CASI; A03, Hardcopy
ONLINE: http://hdl.handle.net/2060/20080009515

An electrohydrodynamic conduction liquid pumping system includes a vessel configured to contain a liquid or a liquid/vapor therein. This vessel can be of a elongate conduit configuration, an elongate channel configuration or a liquid enclosure configuration. At least a single pair of electrodes are disposed in a spaced apart relation to each other on the vessel and configured to be oriented in the liquid. A power supply is coupled to the electrodes and operable to generate electric fields in between the pair of electrodes, the electric forces inducing a net liquid movement relative to the vessel. Various electrode designs are embraced within the concept of this invention.
Official Gazette of the U.S. Patent and Trademark Office
Electrodes; Electrohydrodynamics; Liquid-Vapor Interfaces

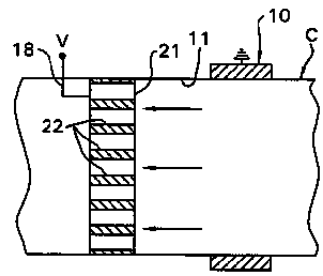

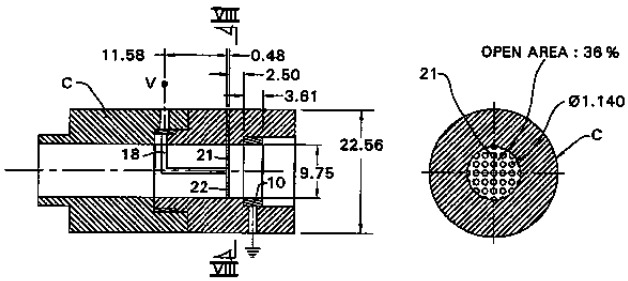

20080009623 NASA, Washington, DC USA

Increased alignment in carbon nanotube growth

Delzeit, Lance D., Inventor; October 30, 2007; 18 pp.; In English

Patent Info.: Filed December 7, 2004; US-Patent-7,288,490; US-Patent-Appl-SN-11/009,854; No Copyright; Avail: CASI; A03, Hardcopy

ONLINE: http://hdl.handle.net/2060/20080009623

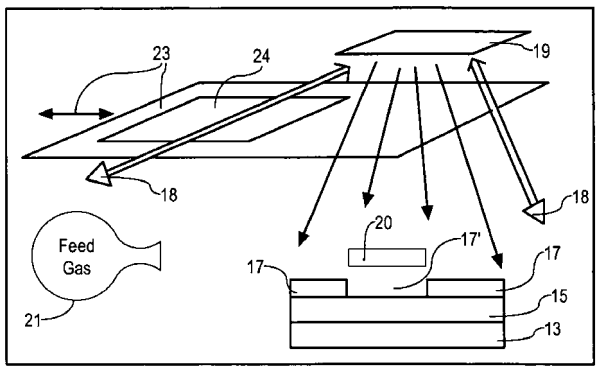

Method and system for fabricating an array of two or more carbon nanotube (CNT) structures on a coated substrate surface, the structures having substantially the same orientation with respect to a substrate surface. A single electrode, having an associated voltage source with a selected voltage, is connected to a substrate surface after the substrate is coated and before growth of the CNT structures, for a selected voltage application time interval. The CNT structures are then grown on a coated substrate surface with the desired orientation. Optionally, the electrode can be disconnected before the CNT structures are grown.

Official Gazette of the U.S. Patent and Trademark Office

Alignment; Carbon Nanotubes; Coatings; Fabrication; Nanostructure Growth; Substrates

20080009624 NASA, Washington, DC USA

Conversion of type of quantum well structure

Ning, Cun-Zheng, Inventor; October 23, 2007; 9 pp.; In English

Patent Info.: Filed August 12, 2004; US-Patent-7,286,573; US-Patent-Appl-SN-10/923,160; No Copyright; Avail: CASI; A02, Hardcopy

ONLINE: http://hdl.handle.net/2060/20080009624

A method for converting a Type 2 quantum well semiconductor material to a Type 1 material. A second layer of undoped material is placed between first and third layers of selectively doped material, which are separated from the second layer by undoped layers having small widths. Doping profiles are chosen so that a first electrical potential increment across a first layer-second layer interface is equal to a first selected value and/or a second electrical potential increment across a second layer-third layer interface is equal to a second selected value. The semiconductor structure thus produced is useful as a laser material and as an incident light detector material in various wavelength regions, such as a mid-infrared region.

Official Gazette of the U.S. Patent and Trademark Office

Quantum Wells; Semiconductors (Materials); Laser Materials

20080009628 California Inst. of Tech., Pasadena, CA USA

Multiple internal seal right micro-electro-mechanical system vacuum package

Hayworth, Ken J., Inventor; Yee, Karl Y., Inventor; Shcheglov, Kirill V., Inventor; Bae, Youngsam, Inventor; Wiberg, Dean V., Inventor; Challoner, A. Dorian, Inventor; Peay, Chris S., Inventor; October 23, 2007; 17 pp.; In English

Patent Info.: Filed June 10, 2004; US-Patent-7,285,844; US-Patent-Appl-SN-10/865,344; No Copyright; Avail: CASI; A03, Hardcopy

ONLINE: http://hdl.handle.net/2060/20080009628

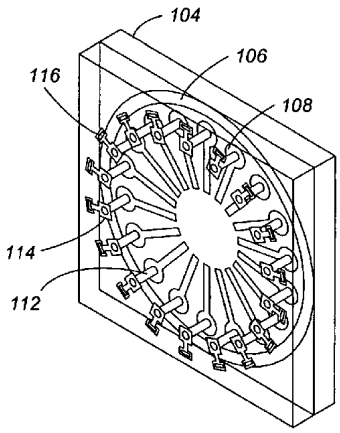

A Multiple Internal Seal Ring (MISR) Micro-Electro-Mechanical System (MEMS) vacuum package that hermetically seals MEMS devices using MISR. The method bonds a capping plate having metal seal rings to a base plate having metal seal rings by wafer bonding the capping plate wafer to the base plate wafer. Bulk electrodes may be used to provide conductive paths between the seal rings on the base plate and the capping plate. All seals are made using only metal-to-metal seal rings deposited on the polished surfaces of the base plate and capping plate wafers. However, multiple electrical feed-through metal traces are provided by fabricating via holes through the capping plate for electrical connection from the outside of the package through the via-holes to the inside of the package. Each metal seal ring serves the dual purposes of hermetic sealing and providing the electrical feed-through metal trace.

Official Gazette of the U.S. Patent and Trademark Office

Microelectromechanical Systems; Vacuum; Seals (Stoppers); Fabrication

20080009632 Michigan Univ., Ann Arbor, MI USA

Thermal modulation for gas chromatography

Hasselbrink, Ernest F., Inventor; Libardoni, Mark, Inventor; Stewart, Kristine, Inventor; Waite, J. Hunter, Inventor; Block, Bruce P., Inventor; Sacks, Richard D., Inventor; October 23, 2007; 15 pp.; In English

Contract(s)/Grant(s): NAG5-12171; Patent Info.: Filed March 2, 2005; US-Patent-7,284,409; US-Patent-Appl-SN-11/070,796; No Copyright; Avail: CASI; A03, Hardcopy

ONLINE: http://hdl.handle.net/2060/20080009632

A thermal modulator device for gas chromatography and associated methods. The thermal modulator device includes a cooling member, an electrically conductive capillary in direct thermal contact with the cooling member, and a power supply electrically coupled to the capillary and operable for controlled resistive heating of the capillary.

Official Gazette of the U.S. Patent and Trademark Office

Gas Chromatography; Modulators; Temperature Control

20080009637 NASA, Washington, DC USA

Carbon nanotube-based sensor and method for detection of crack growth in a structure

Smits, Jan M., Inventor; Kite, Marlen T., Inventor; Moore, Thomas C., Inventor; Wincheski, Russell A., Inventor; Ingram, JoAnne L., Inventor; Watkins, Anthony N., Inventor; Williams, Phillip A., Inventor; October 9, 2007; 17 pp.; In English

Patent Info.: Filed June 15, 2005; US-Patent-7,278,324; US-Patent-Appl-SN-11/155,923; No Copyright; Avail: CASI; A03, Hardcopy

ONLINE: http://hdl.handle.net/2060/20080009637

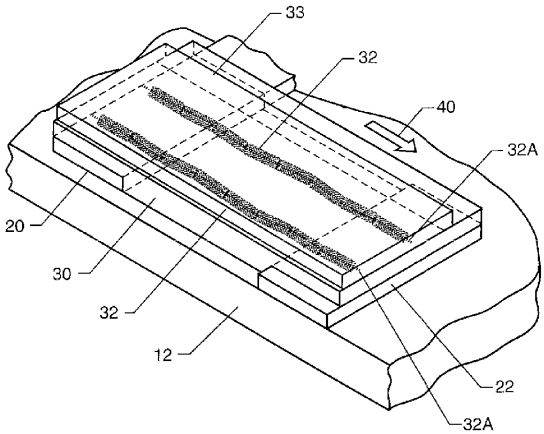

A sensor has a plurality of carbon nanotube (CNT)-based conductors operatively positioned on a substrate. The conductors are arranged side-by-side, such as in a substantially parallel relationship to one another. At least one pair of spaced-apart electrodes is coupled to opposing ends of the conductors. A portion of each of the conductors spanning between each pair of electrodes comprises a plurality of carbon nanotubes arranged end-to-end and substantially aligned along an axis. Because a direct correlation exists between the resistance of a carbon nanotube and its strain, changes experienced by the portion of the structure to which the sensor is coupled induce a corresponding change in the electrical properties of the conductors, thereby enabling detection of crack growth in the structure.

Official Gazette of the U.S. Patent and Trademark Office

Carbon Nanotubes; Conductors; Crack Propagation; Detection; Substrates; Sensors

20080009640 NASA, Washington, DC USA

Functionalization of carbon nanotubes

Khare, Bishun N., Inventor; Meyyappan, Meyya, Inventor; October 2, 2007; 8 pp.; In English

Patent Info.: Filed December 13, 2002; US-Patent-7,276,266; US-Patent-Appl-SN-10/320,698; No Copyright; Avail: CASI; A02, Hardcopy

ONLINE: http://hdl.handle.net/2060/20080009640

Method and system for functionalizing a collection of carbon nanotubes (CNTs). A selected precursor gas (e.g., H.sub.2 or F.sub.2 or C.sub.nH.sub.m) is irradiated to provide a cold plasma of selected target particles, such as atomic H or F, in a first chamber. The target particles are directed toward an array of CNTs located in a second chamber while suppressing transport of ultraviolet radiation to the second chamber. A CNT array is functionalized with the target particles, at or below room temperature, to a point of saturation, in an exposure time interval no longer than about 30 sec.

Official Gazette of the U.S. Patent and Trademark Office

Carbon Nanotubes; Surface Properties; Chemical Composition; Nanotechnology

20080009642 NASA, Washington, DC USA

Nanoengineered thermal materials based on carbon nanotube array composites

Li, Jun, Inventor; Meyyappan, Meyya, Inventor; September 25, 2007; 16 pp.; In English

Patent Info.: Filed April 13, 2004; US-Patent-7,273,095; US-Patent-Appl-SN-10/825,795; No Copyright; Avail: CASI; A03, Hardcopy

ONLINE: http://hdl.handle.net/2060/20080009642

A method for providing for thermal conduction using an array of carbon nanotubes (CNTs). An array of vertically oriented CNTs is grown on a substrate having high thermal conductivity, and interstitial regions between adjacent CNTs in the array are partly or wholly filled with a filler material having a high thermal conductivity so that at least one end of each CNT is exposed. The exposed end of each CNT is pressed against a surface of an object from which heat is to be removed. The CNT-filler composite adjacent to the substrate provides improved mechanical strength to anchor CNTs in place and also serves as a heat spreader to improve diffusion of heat flux from the smaller volume (CNTs) to a larger heat sink.
Official Gazette of the U.S. Patent and Trademark Office
Carbon Nanotubes; Conductive Heat Transfer; Nanofabrication; Arrays

20080009646 Rochester Univ., NY USA
Rapid flow fractionation of particles combining liquid and particulate dielectrophoresis
King, Michael R., Inventor; Lomakin, Oleg, Inventor; Jones, Thomas B., Inventor; Ahmed, Rajib, Inventor; September 11, 2007; 10 pp.; In English
Contract(s)/Grant(s): NAG3-2744; Patent Info.: Filed July 26, 2005; US-Patent-7,267,752; US-Patent-Appl-SN-11/189,123; No Copyright; Avail: CASI; A02, Hardcopy
ONLINE: http://hdl.handle.net/2060/20080009646

Rapid, size-based, deposition of particles from liquid suspension is accomplished using a nonuniform electric field created by coplanar microelectrode strips patterned on an insulating substrate. The scheme uses the dielectrophoretic force both to distribute aqueous liquid containing particles and, simultaneously, to separate the particles. Size-based separation is found within nanoliter droplets formed along the structure after voltage removal. Bioparticles or macromolecules of similar size can also be separated based on subtle differences in dielectric property, by controlling the frequency of the AC current supplied to the electrodes.
Official Gazette of the U.S. Patent and Trademark Office
Particulates; Suspensions; Fractionation; Electrophoresis; Electric Fields; Deposition; Dielectrics

20080009740 NASA Glenn Research Center, Cleveland, OH, USA
Tracking of Cells with a Compact Microscope Imaging System with Intelligent Controls
McDowell, Mark, Inventor; September 11, 2007; 39 pp.; In English; Original contains black and white illustrations
Patent Info.: Filed 24 Feb. 2006; US-Patent-7,268,939; US-Patent-Appl-SN-11/363300; US-Patent-Appl-SN-11/053759; US-Patent-Appl-SN-11/645999; NASA-CASE-LEW-17484-5; No Copyright; Avail: CASI; A03, Hardcopy
ONLINE: http://hdl.handle.net/2060/20080009740

A Microscope Imaging System (CMIS) with intelligent controls is disclosed that provides techniques for scanning, identifying, detecting and tracking microscopic changes in selected characteristics or features of various surfaces including, but not limited to, cells, spheres, and manufactured products subject to difficult-to-see imperfections. The practice of the present invention provides applications that include colloidal hard spheres experiments, biological cell detection for patch clamping, cell movement and tracking, as well as defect identification in products, such as semiconductor devices, where surface damage can be significant, but difficult to detect. The CMIS system is a machine vision system, which combines intelligent image processing with remote control capabilities and provides the ability to autofocus on a microscope sample, automatically scan an image, and perform machine vision analysis on multiple samples simultaneously
Official Gazette of the U.S. Patent and Trademark Office
Control Systems Design; Image Processing; Microscopes; Microscopy

20080009746 NASA Kennedy Space Center, Cocoa Beach, FL, USA
Wireless Instrumentation System and Power Management Scheme Therefore
Perotti, Jose, Inventor; Lucena, Angel, Inventor; Eckhoff, Anthony, Inventor; Mata, Carlos T., Inventor; Blalock, Norman N., Inventor; Medelius, Pedro J., Inventor; September 25, 2007; 16 pp.; In English; Original contains black and white illustrations
Patent Info.: Filed 19 Dec. 2003; US-Patent-7,274,907; US-Patent-Appl-SN-10/748915; NASA-Case-KSC-12386; No Copyright; Avail: CASI; A03, Hardcopy
ONLINE: http://hdl.handle.net/2060/20080009746

A wireless instrumentation system enables a plurality of low power wireless transceivers to transmit measurement data from a plurality of remote station sensors to a central data station accurately and reliably. The system employs a relay based communications scheme where remote stations that cannot communicate directly with the central station due to interference, poor signal strength, etc., are instructed to communicate with other of the remote stations that act as relays to the central

station. A unique power management scheme is also employed to minimize power usage at each remote station and thereby maximize battery life. Each of the remote stations prefembly employs a modular design to facilitate easy reconfiguration of the stations as required.
Official Gazette of the U.S. Patent and Trademark Office
Sensors; Wireless Communication; Electric Power; Instruments

20080009748 NASA Ames Research Center, Moffett Field, CA, USA
Conversion of Type of Quantum Well Structure
Ning, Cun-Zheng, Inventor; October 23, 2007; 9 pp.; In English; Original contains black and white illustrations
Patent Info.: Filed 12 Aug. 2004; US-Patent-7,286,573; US-Patent-Appl-SN-10/923160; NASA-Case-ARC-15157-1; No Copyright; Avail: CASI; A02, Hardcopy
ONLINE: http://hdl.handle.net/2060/20080009748

A method for converting a Type 2 quantum well semiconductor material to a Type 1 material. A second layer of undoped material is placed between first and third layers of selectively doped material, which are separated from the second layer by undoped layers having small widths. Doping profiles are chosen so that a first electrical potential increment across a first layer-second layer interface is equal to a first selected value and/or a second electrical potential increment across a second layer-third layer interface is equal to a second selected value. The semiconductor structure thus produced is useful as a laser material and as an incident light detector material in various wavelength regions, such as a mid-infrared region.
Author
Laser Materials; Quantum Wells; Semiconductors (Materials)

20080009751 NASA Glenn Research Center, Cleveland, OH, USA
Hybrid Power Management System and Method
Eichenberg, Dennis J., Inventor; August 21, 2008; 8 pp.; In English; Original contains black and white illustrations
Patent Info.: Filed 1 Sep. 2004; US-Patent-7,259,692; US-Patent-Appl-10/931205; NASA-Case-LEW-17520-1; No Copyright; Avail: CASI; A02, Hardcopy
ONLINE: http://hdl.handle.net/2060/20080009751

A system and method for hybrid power management. The system includes photovoltaic cells, ultracapacitors, and pulse generators. In one embodiment, the hybrid power management system is used to provide power for a highway safety flasher.
Author
Management Systems; Photovoltaic Cells; Pulse Generators; Power; Electrochemical Capacitors

20080018809 Northwestern Univ., Evanston, IL USA
Methods and apparatus of spatially resolved electroluminescence of operating organic light-emitting diodes using conductive atomic force microscopy
Hersam, Mark C., Inventor; Pingree, Liam S. C., Inventor; April 15, 2008; 17 pp.; In English
Contract(s)/Grant(s): NCC2-1363; Patent Info.: Filed May 26, 2005; US-Patent-7,358,490; US-Patent-Appl-SN-11/138,148; No Copyright; Avail: CASI; A03, Hardcopy
ONLINE: http://hdl.handle.net/2060/20080018809

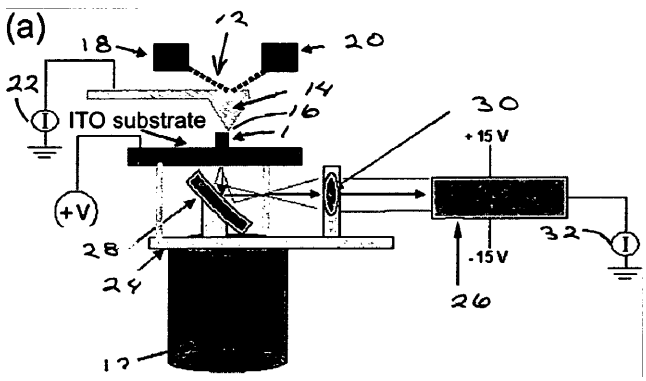

A conductive atomic force microscopy (cAFM) technique which can concurrently monitor topography, charge transport, and electroluminescence with nanometer spatial resolution. This cAFM approach is particularly well suited for probing the electroluminescent response characteristics of operating organic light-emitting diodes (OLEDs) over short length scales.
Official Gazette of the U.S. Patent and Trademark Office
Atomic Force Microscopy; Electroluminescence; Light Emitting Diodes

20080018813 Lynntech, Inc., College Station, TX USA

Transdermal delivery of therapeutic agent

Kwiatkowski, Krzysztof C., Inventor; Hayes, Ryan T., Inventor; Magnuson, James W., Inventor; Giletto, Anthony, Inventor; January 1, 2008; 12 pp.; In English

Contract(s)/Grant(s): NAS3-03033; Patent Info.: Filed June 3, 2004; US-Patent-7,315,758; US-Patent-Appl-SN-10/860,557; No Copyright; Avail: CASI; A03, Hardcopy

ONLINE: http://hdl.handle.net/2060/20080018813

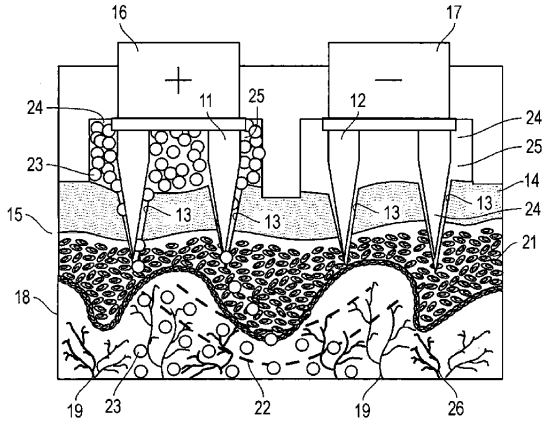

A device for the transdermal delivery of a therapeutic agent to a biological subject that includes a first electrode comprising a first array of electrically conductive microprojections for providing electrical communication through a skin portion of the subject to a second electrode comprising a second array of electrically conductive microprojections. Additionally, a reservoir for holding the therapeutic agent surrounding the first electrode and a pulse generator for providing an exponential decay pulse between the first and second electrodes may be provided. A method includes the steps of piercing a stratum corneum layer of skin with two arrays of conductive microprojections, encapsulating the therapeutic agent into biocompatible charged carriers, surrounding the conductive microprojections with the therapeutic agent, generating an exponential decay pulse between the two arrays of conductive microprojections to create a non-uniform electrical field and electrokinetically driving the therapeutic agent through the stratum corneum layer of skin.

Official Gazette of the U.S. Patent and Trademark Office

Electrical Resistivity; Pulse Generators; Encapsulating

20080018817 NASA, Washington, DC USA

Subranging scheme for SQUID sensors

Penanen, Konstantin I., Inventor; January 29, 2008; 9 pp.; In English

Patent Info.: Filed April 10, 2006; US-Patent-7,323,869; US-Patent-Appl-SN-11/279,137; No Copyright; Avail: CASI; A02, Hardcopy

ONLINE: http://hdl.handle.net/2060/20080018817

A readout scheme for measuring the output from a SQUID-based sensor-array using an improved subranging architecture that includes multiple resolution channels (such as a coarse resolution channel and a fine resolution channel). The scheme employs a flux sensing circuit with a sensing coil connected in series to multiple input coils, each input coil being coupled to a corresponding SQUID detection circuit having a high-resolution SQUID device with independent linearizing feedback. A two-resolution configuration (course and fine) is illustrated with a primary SQUID detection circuit for generating a fine readout, and a secondary SQUID detection circuit for generating a course readout, both having feedback current coupled to the respective SQUID devices via feedback/modulation coils. The primary and secondary SQUID detection circuits function and derive independent feedback. Thus, the SQUID devices may be monitored independently of each other (and read simultaneously) to dramatically increase slew rates and dynamic range.

Official Gazette of the U.S. Patent and Trademark Office

Dynamic Range; Circuits; Detection; Modulation; Feedback

20080018819 NASA, Washington, DC USA

Distributed solid state programmable thermostat/power controller

Alexander, Jane C., Inventor; Howard, David E., Inventor; Smith, Dennis A., Inventor; February 5, 2008; 13 pp.; In English

Patent Info.: Filed December 17, 2003; US-Patent-7,325,749; US-Patent-Appl-SN-10/738,352; No Copyright; Avail: CASI; A03, Hardcopy

ONLINE: http://hdl.handle.net/2060/20080018819

A self-contained power controller having a power driver switch, programmable controller, communication port, and environmental parameter measuring device coupled to a controllable device. The self-contained power controller needs only a single voltage source to power discrete devices, analog devices, and the controlled device. The programmable controller has a run mode which, when selected, upon the occurrence of a trigger event changes the state of a power driver switch and wherein the power driver switch is maintained by the programmable controller at the same state until the occurrence of a second event.

Official Gazette of the U.S. Patent and Trademark Office

Thermostats; Electric Potential; Switches; Actuators; Communication Equipment; Controllers

20080020434 NASA, Washington, DC USA
Schottky barrier diode and method thereof
Aslam, Shahid, Inventor; Franz, David, Inventor; March 11, 2008; 12 pp.; In English
Patent Info.: Filed September 30, 2005; US-Patent-7,341,932; US-Patent-Appl-SN-11/251,531; No Copyright; Avail: CASI; A03, Hardcopy
ONLINE: http://hdl.handle.net/2060/20080020434

Pt/n.sup.-GaN Schottky barrier diodes are disclosed that are particularly suited to serve as ultra-violet sensors operating at wavelengths below 200 nm. The Pt/n.sup.-GaN Schottky barrier diodes have very large active areas, up to 1 cm.sup.2, which exhibit extremely low leakage current at low reverse biases. Very large area Pt/n.sup.-GaN Schottky diodes of sizes 0.25 cm.sup.2 and 1 cm.sup.2 have been fabricated from n.sup.-/n.sup.+ GaN epitaxial layers grown by vapor phase epitaxy on single crystal c-plane sapphire, which showed leakage currents of 14 pA and 2.7 nA, respectively for the 0.25 cm.sup.2 and 1 cm.sup.2 diodes both configured at a 0.5V reverse bias.
Official Gazette of the U.S. Patent and Trademark Office
Schottky Diodes; Vapor Phase Epitaxy; Low Currents; Single Crystals

20080020435 California Inst. of Tech., Pasadena, CA USA
Cross-differential amplifier
Hajimiri, Seyed-Ali, Inventor; Kee, Scott D., Inventor; Aoki, Ichiro, Inventor; March 11, 2008; 14 pp.; In English
Patent Info.: Filed December 12, 2006; US-Patent-7,342,457; US-Patent-Appl-SN-11/638,639; No Copyright; Avail: CASI; A03, Hardcopy
ONLINE: http://hdl.handle.net/2060/20080020435

A cross-differential amplifier is provided. The cross-differential amplifier includes an inductor connected to a direct current power source at a first terminal. A first and second switch, such as transistors, are connected to the inductor at a second terminal. A first and second amplifier are connected at their supply terminals to the first and second switch. The first and second switches are operated to commutate the inductor between the amplifiers so as to provide an amplified signal while limiting the ripple voltage on the inductor and thus limiting the maximum voltage imposed across the amplifiers and switches.
Official Gazette of the U.S. Patent and Trademark Office
Differential Amplifiers; Voltage Amplifiers; Electric Potential; Transistors; Direct Current

20080020443 Illinois Univ., Urbana, IL USA
Sensor chip and apparatus for tactile and/or flow sensing
Liu, Chang, Inventor; Chen, Jack, Inventor; Engel, Jonathan, Inventor; April 15, 2008; 38 pp.; In English
Contract(s)/Grant(s): NAG5-8781; Patent Info.: Filed June 4, 2004; US-Patent-7,357,035; US-Patent-Appl-SN-10/861,096; No Copyright; Avail: CASI; A03, Hardcopy
ONLINE: http://hdl.handle.net/2060/20080020443

A sensor chip, comprising a flexible, polymer-based substrate, and at least one microfabricated sensor disposed on the substrate and including a conductive element. The at least one sensor comprises at least one of a tactile sensor and a flow sensor. Other embodiments of the present invention include sensors and/or multi-modal sensor nodes.
Official Gazette of the U.S. Patent and Trademark Office
Detection; Chips; Sensors; Substrates

20080023617 Montana Tech of the Univ. of Montana, Butte, MT, USA
Method of detecting system function by measuring frequency response
Morrison, John L., Inventor; Morrison, William H., Inventor; July 1, 2008; 22 pp.; In English
Contract(s)/Grant(s): NNA05AC24C; Patent Info.: Filed July 5, 2007; US-Patent-7,395,163; US-Patent-Appl-SN-11/825,629; No Copyright; Avail: CASI; A03, Hardcopy
ONLINE: http://hdl.handle.net/2060/20080023617

Real time battery impedance spectrum is acquired using one time record, Compensated Synchronous Detection (CSD). This parallel method enables battery diagnostics. The excitation current to a test battery is a sum of equal amplitude sin waves of a few frequencies spread over range of interest. The time profile of this signal has duration that is a few periods of the lowest frequency. The voltage response of the battery, average deleted, is the impedance of the battery in the time domain. Since the excitation frequencies are known, synchronous detection processes the time record and each component, both magnitude and

phase, is obtained. For compensation, the components, except the one of interest, are reassembled in the time domain. The resulting signal is subtracted from the original signal and the component of interest is synchronously detected. This process is repeated for each component.
Official Gazette of the U.S. Patent and Trademark Office
Frequency Measurement; Frequency Response; Impedance; Real Time Operation

20080025640 NASA, Washington, DC USA
Ferroelectric Light Control Device
Park, Yeonjoon, Inventor; Choi, Sang H., Inventor; King, Glen C., Inventor; Kim, Jae-Woo, Inventor; Elliott, Jr., James R., Inventor; May 27, 2008; 10 pp.; In English
Patent Info.: Filed September 7, 2006; US-Patent-7,379,231; US-Patent-Appl-SN-11/470,771; No Copyright; Avail: CASI; A02, Hardcopy
ONLINE: http://hdl.handle.net/2060/20080025640

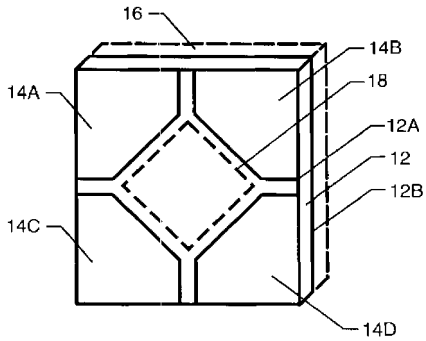

A light control device is formed by ferroelectric material and N electrodes positioned adjacent thereto to define an N-sided regular polygonal region or circular region there between where N is a multiple of four.
Official Gazette of the U.S. Patent and Trademark Office
Control Equipment; Ferroelectric Materials; Electrodes

20080025652 International Business Machines Corp., Armonk, NY USA
Apparatus and methods for packaging integrated circuit chips with antenna modules providing closed electromagnetic environment for integrated antennas
Gaucher, Brian P., Inventor; Grzyb, Janusz, Inventor; Liu, Duixian, Inventor; Pfeiffer, Ullrich R., Inventor; May 13, 2008; 14 pp.; In English
Contract(s)/Grant(s): NAS3-03070; Patent Info.: Filed January 13, 2006; US-Patent-7,372,408; US-Patent-Appl-SN-11/332,737; No Copyright; Avail: CASI; A03, Hardcopy
ONLINE: http://hdl.handle.net/2060/20080025652
Apparatus and methods are provided for packaging IC chips together with integrated antenna modules designed to provide a closed EM (electromagnetic) environment for antenna radiators, thereby allowing antennas to be designed independent from the packaging technology.
Official Gazette of the U.S. Patent and Trademark Office
Closed Ecological Systems; Integrated Circuits; Modules; Chips

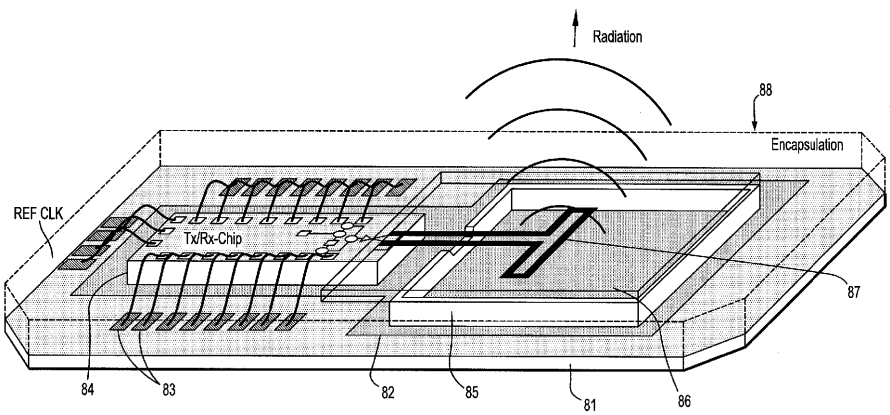

20080025690 NASA, Washington, DC USA
Hybrid eletromechanical actuator and actuation system
Su, Ji, Inventor; Xu, Tian-Bing, Inventor; July 1, 2008; 10 pp.; In English
Patent Info.: Filed March 4, 2005; US-Patent-7,394,181; US-Patent-Appl-SN-11/076,824; No Copyright; Avail: CASI; A02, Hardcopy
ONLINE: http://hdl.handle.net/2060/20080025690
A hybrid electromechanical actuator has two different types of electromechanical elements, one that expands in a transverse direction when electric power is applied thereto and one that contracts in a transverse direction when electric power

is applied thereto. The two electromechanical elements are (i) disposed in relation to one another such that the transverse directions thereof are parallel to one another, and (ii) mechanically coupled to one another at least at two opposing edges thereof. Electric power is applied simultaneously to the elements.
Official Gazette of the U.S. Patent and Trademark Office
Actuators; Electromechanical Devices

20080025694 California Inst. of Tech., Pasadena, CA USA
Fabrication of nano-gap electrode arrays by the construction and selective chemical etching of nano-crosswire stacks
Son, Kyung-Ah, Inventor; Prokopuk, Nicholas, Inventor; June 10, 2008; 20 pp.; In English
Patent Info.: Filed May 31, 2005; US-Patent-7,385,295; US-Patent-Appl-SN-11/141,486; No Copyright; Avail: CASI; A03, Hardcopy
ONLINE: http://hdl.handle.net/2060/20080025694

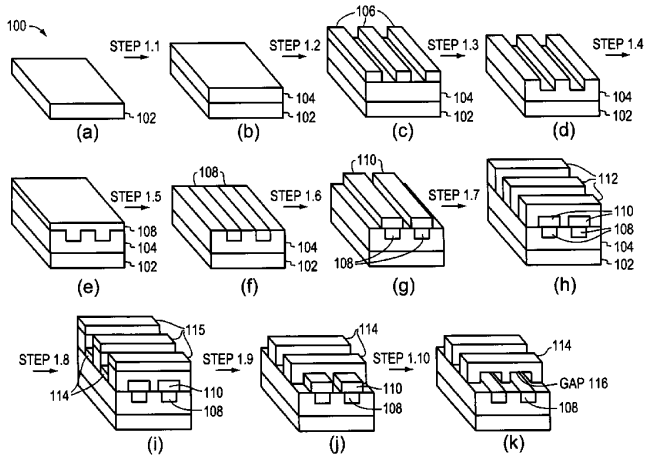

Methods of fabricating nano-gap electrode structures in array configurations, and the structures so produced. The fabrication method involves depositing first and second pluralities of electrodes comprising nanowires using processes such as lithography, deposition of metals, lift-off processes, and chemical etching that can be performed using conventional processing tools applicable to electronic materials processing. The gap spacing in the nano-gap electrode array is defined by the thickness of a sacrificial spacer layer that is deposited between the first and second pluralities of electrodes. The sacrificial spacer layer is removed by etching, thereby leaving a structure in which the distance between pairs of electrodes is substantially equal to the thickness of the sacrificial spacer layer. Electrode arrays with gaps measured in units of nanometers are produced. In one embodiment, the first and second pluralities of electrodes are aligned in mutually orthogonal orientations.
Official Gazette of the U.S. Patent and Trademark Office
Etching; Fabrication; Nanowires

20080025695 Rice Univ., Houston, TX USA
Process for attaching molecular wires and devices to carbon nanotubes and compositions thereof
Tour, James M., Inventor; Bahr, Jeffrey L., Inventor; Yang, Jiping, Inventor; June 10, 2008; 25 pp.; In English
Contract(s)/Grant(s): NCC9-77; Patent Info.: Filed August 1, 2003; US-Patent-7,384,815; US-Patent-Appl-SN-10/632,948; No Copyright; Avail: CASI; A03, Hardcopy
ONLINE: http://hdl.handle.net/2060/20080025695
The present invention is directed towards processes for covalently attaching molecular wires and molecular electronic devices to carbon nanotubes and compositions thereof. Such processes utilize diazonium chemistry to bring about this marriage of wire-like nanotubes with molecular wires and molecular electronic devices.
Official Gazette of the U.S. Patent and Trademark Office
Carbon Nanotubes; Nanotubes; Wire

20080031675 NASA Glenn Research Center, Cleveland, OH, USA
Apparatus and Method for Packaging and Integrating Microphotonic Devices
Nguyen, Hung, Inventor; July 08, 2008; 19 pp.; In English; Original contains black and white illustrations
Patent Info.: Filed 13 Jul. 2005; US-Patent-7,397,978; US-Patent-Appl-SN-11/180990; NASA-Case-LEW-17694-1; No Copyright; Avail: CASI; A03, Hardcopy
ONLINE: http://hdl.handle.net/2060/20080031675
An apparatus is disclosed that includes a carrier structure and an optical coupling arrangement. The carrier structure is made of a silicon material and allows for the packaging and integrating of microphotonic devices onto a single chip. The optical coupling mechanism enables laser light to be coupled into and out of a microphotonic resonant disk integrated on the carrier. The carrier provides first, second and third cavities that are dimensioned so as to accommodate the insertion and snug

fitting of the microphotonic resonant disk and first and second prisms that are implemented by the optical coupling arrangement to accommodate the laser coupling.
Author
Photonics; Optoelectronic Devices; Microelectronics; Electronic Packaging; Optical Coupling

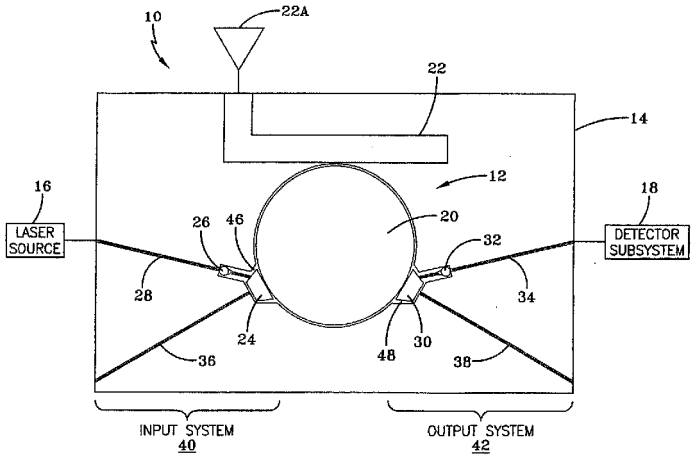

20080031679 NASA Glenn Research Center, Cleveland, OH, USA
Miniaturized Metal (Metal Alloy)/PdO(x)/SiC Hydrogen and Hydrocarbon Gas Sensors
Hunter, Gary W., Inventor; Xu, Jennifer C., Inventor; Lukco, Dorothy, Inventor; June 24, 2008; 18 pp.; In English; Original contains black and white illustrations
Patent Info.: Filed 12 May 2006; US-Patent-7,389,675; US-Patent-Appl-SN/11/434578; NASA-Case-LEW-17859-1; No Copyright; Avail: CASI; A03, Hardcopy
ONLINE: http://hdl.handle.net/2060/20080031679

A miniaturized Schottky diode hydrogen and hydrocarbon sensor and the method of making same is disclosed and claimed. The sensor comprises a catalytic metal layer, such as palladium, a silicon carbide substrate layer and a thin barrier layer in between the catalytic and substrate layers made of palladium oxide (PdO(x)). This highly stable device provides sensitive gas detection at temperatures ranging from at least 450 to 600 C. The barrier layer prevents reactions between the catalytic metal layer and the substrate layer. Conventional semiconductor fabrication techniques are used to fabricate the small-sided sensors. The use of a thicker palladium oxide barrier layer for other semiconductor structures such as a capacitor and transistor structures is also disclosed.
Author
Schottky Diodes; Miniaturization; Gas Detectors; Hydrogen; Hydrocarbons; Sensors

34
FLUID MECHANICS AND THERMODYNAMICS

Includes fluid dynamics and kinematics and all forms of heat transfer; boundary layer flow; hydrodynamics; hydraulics; fluidics; mass transfer and ablation cooling. For related information see also *02 Aerodynamics*.

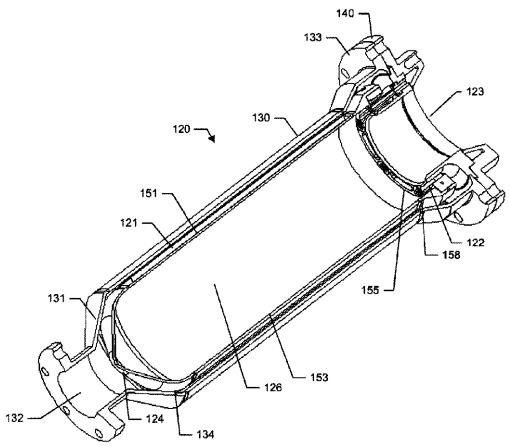

20080009506 Georgia Tech Research Inst., Atlanta, GA USA
Stagnation point reverse flow combustor for a combustion system
Zinn, Ben T., Inventor; Neumeier, Yedidia, Inventor; Seitzman, Jerry M., Inventor; Jagoda, Jechiel, Inventor; Hashmonay, Ben-Ami, Inventor; January 30, 2007; 30 pp.; In English
Contract(s)/Grant(s): NCC3-982; Patent Info.: Filed May 11, 2005; US-Patent-7,168,949; US-Patent-Appl-SN-11/127,038; No Copyright; Avail: CASI; A03, Hardcopy
ONLINE: http://hdl.handle.net/2060/20080009506

A combustor assembly includes a combustor vessel having a wall, a proximate end defining an opening and a closed distal end opposite said proximate end. A manifold is carried by the proximate end. The manifold defines a combustion products exit. The combustion products exit being

axially aligned with a portion of the closed distal end. A plurality of combustible reactant ports is carried by the manifold for directing combustible reactants into the combustion vessel from the region of the proximate end towards the closed distal end.
Official Gazette of the U.S. Patent and Trademark Office
Combustion; Stagnation Point

20080018815 NASA, Washington, DC USA
System for controlling child safety seat environment
Dabney, Richard W., Inventor; Elrod, Susan V., Inventor; January 22, 2008; 9 pp.; In English
Patent Info.: Filed January 28, 2005; US-Patent-7,320,223; US-Patent-Appl-SN-11/047,343; No Copyright; Avail: CASI; A02, Hardcopy
ONLINE: http://hdl.handle.net/2060/20080018815

A system is provided to control the environment experienced by a child in a child safety seat. Each of a plurality of thermoelectric elements is individually controllable to be one of heated and cooled relative to an ambient temperature. A first portion of the thermoelectric elements are positioned on the child safety seat such that a child sitting therein is positioned thereover. A ventilator coupled to the child safety seat moves air past a second portion of the thermoelectric elements and filters the air moved therepast. One or more jets coupled to the ventilator receive the filtered air. Each jet is coupled to the child safety seat and can be positioned to direct the heated/cooled filtered air to the vicinity of the head of the child sitting in the child safety seat.
Official Gazette of the U.S. Patent and Trademark Office
Safety Factors; Systems Engineering; Ambient Temperature; Thermoelectricity; Safety

20080020315 Ohio State Univ., Columbus, OH USA
Localized arc filament plasma actuators for noise mitigation and mixing enhancement
Samimy, Mohammad, Inventor; Adamovich, Igor, Inventor; February 26, 2008; 17 pp.; In English
Contract(s)/Grant(s): NAS3-02116; Patent Info.: Filed September 1, 2004; US-Patent-7,334,394; US-Patent-Appl-SN-10/932,325; No Copyright; Avail: CASI; A03, Hardcopy
ONLINE: http://hdl.handle.net/2060/20080020315

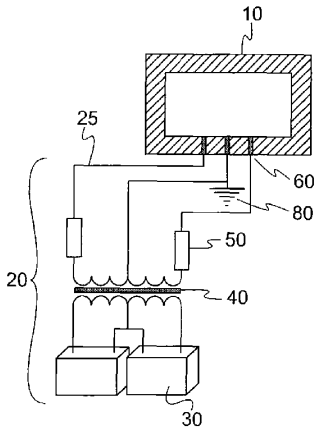

A device for controlling fluid flow. The device includes an arc generator coupled to electrodes. The electrodes are placed adjacent a fluid flowpath such that upon being energized by the arc generator, an arc filament plasma adjacent the electrodes is formed. In turn, this plasma forms a localized high temperature, high pressure perturbation in the adjacent fluid flowpath. The perturbations can be arranged to produce vortices, such as streamwise vortices, in the flowing fluid to control mixing and noise in such flows. The electrodes can further be arranged within a conduit configured to contain the flowing fluid such that when energized in a particular frequency and sequence, can excite flow instabilities in the flowing fluid. The placement of the electrodes is such that they are unobtrusive relative to the fluid flowpath being controlled.
Official Gazette of the U.S. Patent and Trademark Office
Arc Generators; Electrodes; Fluid Flow; Plasmas (Physics); Noise Reduction

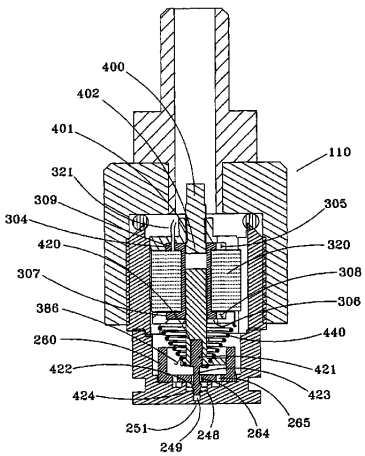

20080023614 Isothermal Systems Research, Inc., Liberty Lake, WA USA
Actuated atomizer
Tilton, Charles, Inventor; Weiler, Jeff, Inventor; Palmer, Randall, Inventor; Appel, Philip, Inventor; May 13, 2008; 15 pp.; In English
Contract(s)/Grant(s): NAS8-40644; Patent Info.: Filed October 24, 2002; US-Patent-7,370,817; US-Patent-Appl-SN-10/281,391; No Copyright; Avail: CASI; A03, Hardcopy
ONLINE: http://hdl.handle.net/2060/20080023614

An actuated atomizer is adapted for spray cooling or other applications wherein a well-developed, homogeneous and generally conical spray mist is required. The actuated atomizer includes an outer shell formed by an inner ring; an outer ring; an actuator insert and a cap. A nozzle framework is positioned within the actuator insert. A base of the nozzle framework defines swirl inlets, a swirl chamber and a swirl chamber. A nozzle insert defines a center inlet and feed ports. A spool is positioned within the coil housing, and carries the coil windings having a number of turns calculated to result in a magnetic field of sufficient strength to overcome the bias of the spring. A plunger moves in response to

the magnetic field of the windings. A stop prevents the pintle from being withdrawn excessively. A pintle, positioned by the plunger, moves between first and second positions. In the first position, the head of the pintle blocks the discharge passage of the nozzle framework, thereby preventing the atomizer from discharging fluid. In the second position, the pintle is withdrawn from the swirl chamber, allowing the atomizer to release atomized fluid. A spring biases the pintle to block the discharge passage. The strength of the spring is overcome, however, by the magnetic field created by the windings positioned on the spool, which withdraws the plunger into the spool and further compresses the spring.
Official Gazette of the U.S. Patent and Trademark Office
Actuators; Atomizers; Sprayers

35
INSTRUMENTATION AND PHOTOGRAPHY

Includes remote sensors; measuring instruments and gages; detectors; cameras and photographic supplies; and holography. For aerial photography see *43 Earth Resources and Remote Sensing*. For related information see also *06 Avionics and Aircraft Instrumentation*; and *19 Spacecraft Instrumentation and Astrionics*.

20080009441 NASA, Washington, DC USA
Optimal binarization of gray-scaled digital images via fuzzy reasoning
Dominguez, Jesus A., Inventor; Klinko, Steven J., Inventor; November 20, 2007; 12 pp.; In English
Patent Info.: Filed February 11, 2004; US-Patent-7,298,897; US-Patent-Appl-SN-10/779,551; No Copyright; Avail: CASI; A03, Hardcopy
ONLINE: http://hdl.handle.net/2060/20080009441

A technique for finding an optimal threshold for binarization of a gray scale image employs fuzzy reasoning. A triangular membership function is employed which is dependent on the degree to which the pixels in the image belong to either the foreground class or the background class. Use of a simplified linear fuzzy entropy factor function facilitates short execution times and use of membership values between 0.0 and 1.0 for improved accuracy. To improve accuracy further, the membership function employs lower and upper bound gray level limits that can vary from image to image and are selected to be equal to the minimum and the maximum gray levels, respectively, that are present in the image to be converted. To identify the optimal binarization threshold, an iterative process is employed in which different possible thresholds are tested and the one providing the minimum fuzzy entropy measure is selected.
Official Gazette of the U.S. Patent and Trademark Office
Gray Scale; Image Analysis; Thresholds; Pixels; Conversion

20080009450 NASA, Washington, DC USA
Wireless fluid level measuring system
Taylor, Bryant D., Inventor; Woodard, Stanley E., Inventor; August 14, 2007; 12 pp.; In English
Patent Info.: Filed September 12, 2005; US-Patent-7,255,004; US-Patent-Appl-SN-11/229,438; No Copyright; Avail: CASI; A03, Hardcopy
ONLINE: http://hdl.handle.net/2060/20080009450

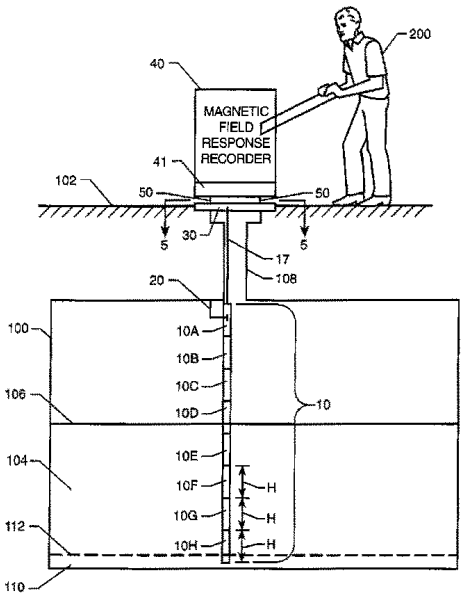

A level-sensing probe positioned in a tank is divided into sections with each section including (i) a fluid-level capacitive sensor disposed along the length thereof, (ii) an inductor electrically coupled to the capacitive sensor, (iii) a sensor antenna positioned for inductive coupling to the inductor, and (iv) an electrical conductor coupled to the sensor antenna. An electrically non-conductive housing accessible from a position outside of the tank houses antennas arrayed in a pattern. Each antenna is electrically coupled to the electrical conductor from a corresponding one of the sections. A magnetic field response recorder has a measurement head with transceiving antennas arrayed therein to correspond to the pattern of the housing's antennas. When a measurement is to be taken, the measurement head is mechanically coupled to the housing so that each housing antenna is substantially aligned with a specific one of the transceiving antennas.
Official Gazette of the U.S. Patent and Trademark Office
Depth Measurement; Fluids; Housings; Antennas; Electric Conductors

20080009453 California Inst. of Tech., Pasadena, CA USA

Holographic memory using beam steering

Chao, Tien-Hsin, Inventor; Hanan, Jay C., Inventor; Reyes, George F., Inventor; Zhou, Hanying, Inventor; July 31, 2007; 24 pp.; In English

Contract(s)/Grant(s): NAS7-1407; Patent Info.: Filed August 4, 2006; US-Patent-7,251,066; US-Patent-Appl-SN-11/462,495; No Copyright; Avail: CASI; A03, Hardcopy

ONLINE: http://hdl.handle.net/2060/20080009453

A method, apparatus, and system provide the ability for storing holograms at high speed. A single laser diode emits a collimated laser beam to both write to and read from a photorefractice crystal. One or more liquid crystal beam steering spatial light modulators (BSSLMs) steer a reference beam, split from the collimated laser beam, at high speed to the photorefractive crystal.

Official Gazette of the U.S. Patent and Trademark Office

Beam Steering; High Speed; Holography; Memory (Computers); Semiconductor Diodes

20080009480 Florida Univ., Gainesville, FL USA

Radiography by selective detection of scatter field velocity components

Jacobs, Alan M., Inventor; Dugan, Edward T., Inventor; Shedlock, Daniel, Inventor; May 29, 2007; 12 pp.; In English

Patent Info.: Filed July 20, 2004; US-Patent-7,224,772; US-Patent-Appl-SN-10/896,243; No Copyright; Avail: CASI; A03, Hardcopy

ONLINE: http://hdl.handle.net/2060/20080009480

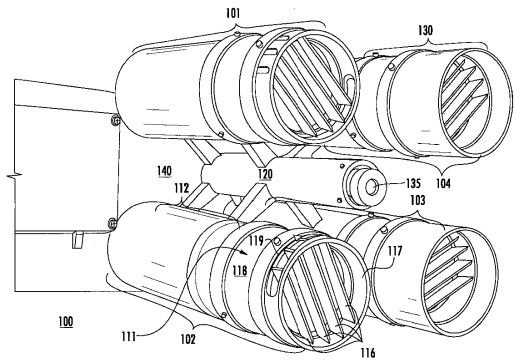

A reconfigurable collimated radiation detector, system and related method includes at least one collimated radiation detector. The detector has an adjustable collimator assembly including at least one feature, such as a fin, optically coupled thereto. Adjustments to the adjustable collimator selects particular directions of travel of scattered radiation emitted from an irradiated object which reach the detector. The collimated detector is preferably a collimated detector array, where the collimators are independently adjustable. The independent motion capability provides the capability to focus the image by selection of the desired scatter field components. When an array of reconfigurable collimated detectors is provided, separate image data can be obtained from each of the detectors and the respective images cross-correlated and combined to form an enhanced image.

Official Gazette of the U.S. Patent and Trademark Office

Radiation Detectors; Radiography; Collimation

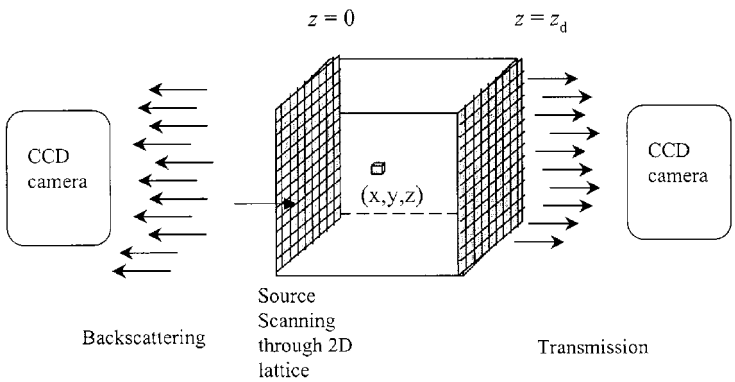

20080009521

Hybrid-dual-fourier tomographic algorithm for a fast three-dimensional optical image reconstruction in turbid media

Alfano, Robert R., Inventor; Cai, Wei, Inventor; May 15, 2007; 20 pp.; In English

Patent Info.: Filed June 5, 2003; US-Patent-7,218,959; US-Patent-Appl-SN-10/456,264; No Copyright; Avail: CASI; A03, Hardcopy

ONLINE: http://hdl.handle.net/2060/20080009521

A reconstruction technique for reducing computation burden in the 3D image processes, wherein the reconstruction procedure comprises an inverse and a forward model. The inverse model uses a hybrid dual Fourier algorithm that combines a 2D Fourier inversion with a 1D matrix inversion to thereby provide high-speed inverse computations. The inverse algorithm uses a hybrid transfer to provide fast Fourier inversion for data of multiple sources and multiple detectors. The forward model is based on an analytical cumulant solution of a radiative transfer equation. The accurate analytical form of the solution to the radiative transfer equation provides an efficient formalism for fast computation of the forward model.

Official Gazette of the U.S. Patent and Trademark Office

Image Reconstruction; Fourier Transformation; Algorithms; Tomography

20080009522 Johns Hopkins Univ., Baltimore, MD USA

Method and apparatus for multiple-projection, dual-energy x-ray absorptiometry scanning

Charles, Jr., Harry K., Inventor; Beck, Thomas J., Inventor; Feldmesser, Howard S., Inventor; Magee, Thomas C., Inventor; April 10, 2007; 31 pp.; In English

Contract(s)/Grant(s): NCC9-58; Patent Info.: Filed August 14, 2003; US-Patent-7,203,274; US-Patent-Appl-SN-10/399,617; No Copyright; Avail: CASI; A03, Hardcopy

ONLINE: http://hdl.handle.net/2060/20080009522

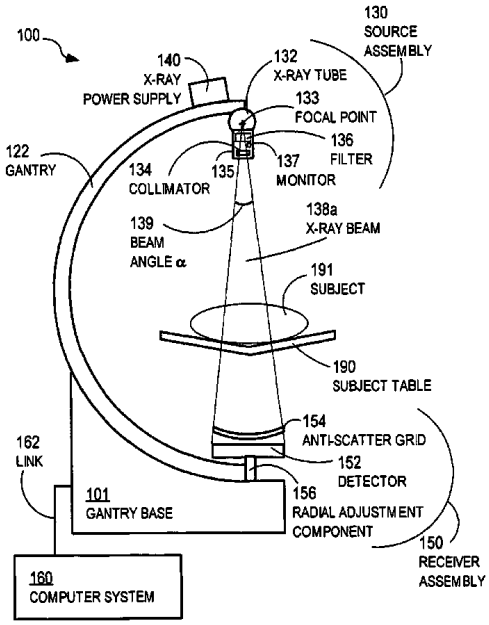

Methods and apparatuses for advanced, multiple-projection, dual-energy X-ray absorptiometry scanning systems include combinations of a conical collimator; a high-resolution two-dimensional detector; a portable, power-capped, variable-exposure-time power supply; an exposure-time control element; calibration monitoring; a three-dimensional anti-scatter-grid; and a gantry-gantry base assembly that permits up to seven projection angles for overlapping beams. Such systems are capable of high precision bone structure measurements that can support three dimensional bone modeling and derivations of bone strength, risk of injury, and efficacy of countermeasures among other properties.

Official Gazette of the U.S. Patent and Trademark Office

Scanners; Collimators; X Ray Absorption

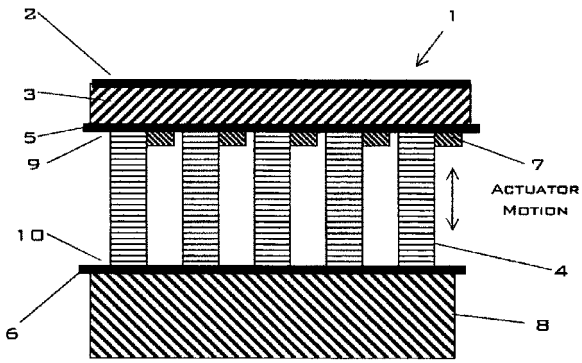

20080009635 QorTek, Inc., Williamsport, PA USA

Thin, nearly wireless adaptive optical device

Knowles, Gareth, Inventor; Hughes, Eli, Inventor; October 16, 2007; 14 pp.; In English

Contract(s)/Grant(s): NAS5-03014; Patent Info.: Filed June 21, 2004; US-Patent-7,281,808; US-Patent-Appl-SN-10/872,974; No Copyright; Avail: CASI; A03, Hardcopy

ONLINE: http://hdl.handle.net/2060/20080009635

A thin, nearly wireless adaptive optical device capable of dynamically modulating the shape of a mirror in real time to compensate for atmospheric distortions and/or variations along an optical material is provided. The device includes an optical layer, a substrate, at least one electronic circuit layer with nearly wireless architecture, an array of actuators, power electronic switches, a reactive force element, and a digital controller. Actuators are aligned so that each axis of expansion and contraction intersects both substrate and reactive force element. Electronics layer with nearly wireless architecture, power electronic switches, and digital controller are provided within a thin-film substrate. The size and weight of the adaptive optical device is solely dominated by the size of the actuator elements rather than by the power distribution system.

Official Gazette of the U.S. Patent and Trademark Office

Adaptive Optics; Mirrors; Optical Equipment; Optical Materials; Real Time Operation; Distortion

20080009645 NASA, Washington, DC USA

Tracking of cells with a compact microscope imaging system with intelligent controls

McDowell, Mark, Inventor; September 11, 2007; 39 pp.; In English

Patent Info.: Filed February 24, 2006; US-Patent-7,268,939; US-Patent-Appl-SN-11/363,300; No Copyright; Avail: CASI; A03, Hardcopy

ONLINE: http://hdl.handle.net/2060/20080009645

A Microscope Imaging System (CMIS) with intelligent controls is disclosed that provides techniques for scanning, identifying, detecting and tracking microscopic changes in selected characteristics or features of various surfaces including, but not limited to, cells, spheres, and manufactured products subject to difficult-to-see imperfections. The practice of the present invention provides applications that include colloidal hard spheres experiments, biological cell detection for patch clamping, cell movement and tracking, as well as defect identification in products, such as semiconductor devices, where surface damage can be significant, but difficult to detect. The CMIS system is a machine vision system, which combines

intelligent image processing with remote control capabilities and provides the ability to auto-focus on a microscope sample, automatically scan an image, and perform machine vision analysis on multiple samples simultaneously.
Official Gazette of the U.S. Patent and Trademark Office
Microscopy; Image Processing; Artificial Intelligence; Cells (Biology); Computer Vision; Optical Tracking

20080023523 NASA, Washington, DC USA
Method and system for sensing and identifying foreign particles in a gaseous environment
Choi, Sang H., Inventor; Park, Yeonjoon, Inventor; May 20, 2008; 7 pp.; In English
Patent Info.: Filed September 28, 2006; US-Patent-7,375,808; US-Patent-Appl-SN-11/536,120; No Copyright; Avail: CASI; A02, Hardcopy
ONLINE: http://hdl.handle.net/2060/20080023523

An optical method and system sense and identify a foreign particle in a gaseous environment. A light source generates light. An electrically-conductive sheet has an array of holes formed through the sheet. Each hole has a diameter that is less than one quarter of the light's wavelength. The sheet is positioned relative to the light source such that the light is incident on one face of the sheet. An optical detector is positioned adjacent the sheet's opposing face and is spaced apart therefrom such that a gaseous environment is adapted to be disposed there between. Alterations in the light pattern detected by the optical detector indicate the presence of a foreign particle in the holes or on the sheet, while a laser induced fluorescence (LIF) signature associated with the foreign particle indicates the identity of the foreign particle.
Official Gazette of the U.S. Patent and Trademark Office
Optical Measuring Instruments; Gas Composition; Detectors

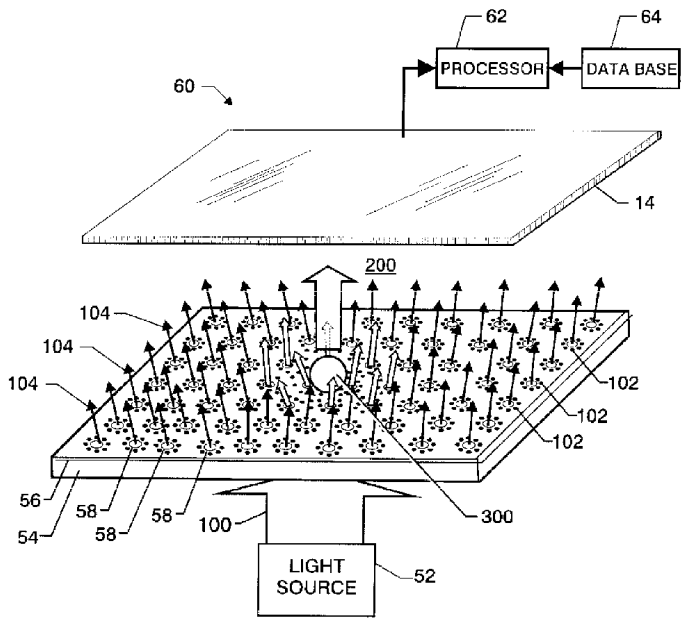

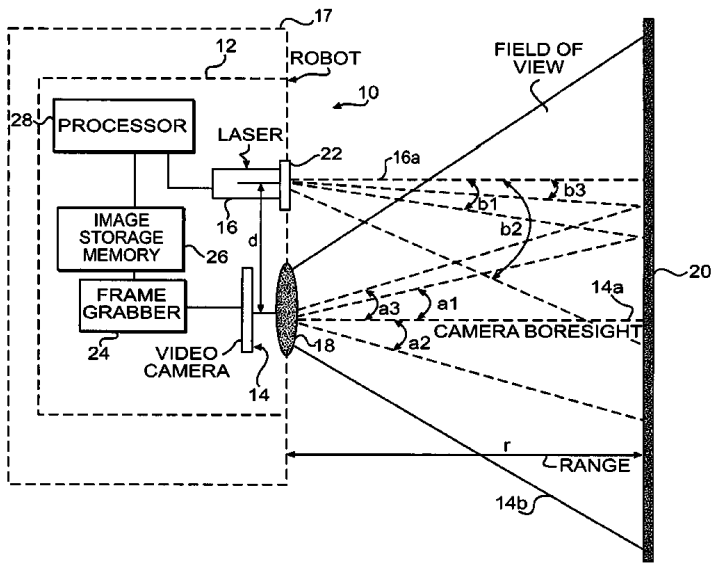

20080025650 NASA, Washington, DC USA
Video sensor with range measurement capability
Briscoe, Jeri M., Inventor; Corder, Eric L., Inventor; Howard, Richard T., Inventor; Broderick, David J., Inventor; May 20, 2008; 6 pp.; In English
Patent Info.: Filed April 13, 2005; US-Patent-7,375,801; US-Patent-Appl-SN-11/108,140; No Copyright; Avail: CASI; A02, Hardcopy
ONLINE: http://hdl.handle.net/2060/20080025650

A video sensor device is provided which incorporates a rangefinder function. The device includes a single video camera and a fixed laser spaced a predetermined distance from the camera for, when activated, producing a laser beam. A diffractive optic element divides the beam so that multiple light spots are produced on a target object. A processor calculates the range to the object based on the known spacing and angles determined from the light spots on the video images produced by the camera.
Official Gazette of the U.S. Patent and Trademark Office
Laser Beams; Range Finders; Cameras; Lasers; Rangefinding

20080025655 California Inst. of Tech., Pasadena, CA USA
Single substrate camera device with CMOS image sensor
Fossum, Eric R., Inventor; Nixon, Robert, Inventor; May 6, 2008; 19 pp.; In English
Patent Info.: Filed April 15, 2003; US-Patent-7,369,166; US-Patent-Appl-SN-10/414,871; No Copyright; Avail: CASI; A03, Hardcopy
ONLINE: http://hdl.handle.net/2060/20080025655

Single substrate device is formed to have an image acquisition device and a controller. The controller on the substrate controls the system operation.
Official Gazette of the U.S. Patent and Trademark Office
Control Systems Design; Substrates; Cameras; Controllers

20080025656 Massachusetts Inst. of Tech., Cambridge, MA USA
Elastomeric actuator devices for magnetic resonance imaging
Dubowsky, Steven, Inventor; Hafez, Moustapha, Inventor; Jolesz, Ferenc A., Inventor; Kacher, Daniel F., Inventor; Lichter, Matthew, Inventor; Weiss, Peter, Inventor; Wingert, Andreas, Inventor; April 22, 2008; 57 pp.; In English
Patent Info.: Filed November 8, 2002; US-Patent-7,362,889; US-Patent-Appl-SN-10/291,866; No Copyright; Avail: CASI; A04, Hardcopy
ONLINE: http://hdl.handle.net/2060/20080025656

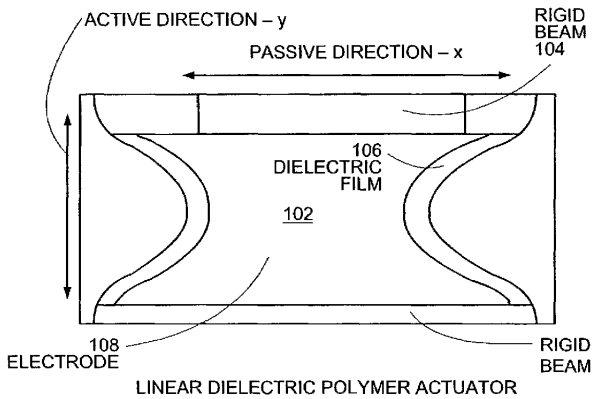

The present invention is directed to devices and systems used in magnetic imaging environments that include an actuator device having an elastomeric dielectric film with at least two electrodes, and a frame attached to the actuator device. The frame can have a plurality of configurations including, such as, for example, at least two members that can be, but not limited to, curved beams, rods, plates, or parallel beams. These rigid members can be coupled to flexible members such as, for example, links wherein the frame provides an elastic restoring force. The frame preferably provides a linear actuation force characteristic over a displacement range. The linear actuation force characteristic is defined as .+-.20% and preferably 10% over a displacement range. The actuator further includes a passive element disposed between the flexible members to tune a stiffness characteristic of the actuator. The passive element can be a bi-stable element. The preferred embodiment actuator includes one or more layers of the elastomeric film integrated into the frame. The elastomeric film can be made of many elastomeric materials such as, for example, but not limited to, acrylic, silicone and latex.
Official Gazette of the U.S. Patent and Trademark Office
Magnetic Resonance; Imaging Techniques; Dielectrics; Silicones; Curved Beams; Displacement

20080031674 NASA Kennedy Space Center, Cocoa Beach, FL, USA
Image Edge Extraction via Fuzzy Reasoning
Dominquez, Jesus A., Inventor; Klinko, Steve, Inventor; July 15, 2008; 14 pp.; In English; Original contains black and white illustrations
Patent Info.: Filed 19 Feb. 2004; US-Patent-7,400,766; US-Patent-Appl-SN-10/783295; NASA-Case-KSC-12278; No Copyright; Avail: CASI; A03, Hardcopy
ONLINE: http://hdl.handle.net/2060/20080031674

A computer-based technique for detecting edges in gray level digital images employs fuzzy reasoning to analyze whether each pixel in an image is likely on an edge. The image is analyzed on a pixel-by-pixel basis by analyzing gradient levels of pixels in a square window surrounding the pixel being analyzed. An edge path passing through the pixel having the greatest intensity gradient is used as input to a fuzzy membership function, which employs fuzzy singletons and inference rules to assigns a new gray level value to the pixel that is related to the pixel's edginess degree.
Author
Edge Detection; Image Analysis; Fuzzy Systems

36
LASERS AND MASERS

Includes lasing theory, laser pumping techniques, maser amplifiers, laser materials, and the assessment of laser and maser outputs. For cases where the application of the laser or maser is emphasized see also the specific category where the application is treated. For related information see also *76 Solid-State Physics*.

20080018810 City Univ. of New York, NY USA
Cr.sup.4+-doped mixed alloy laser materials and lasers and methods using the materials
Alfano, Robert R., Inventor; Petricevic, Vladimir, Inventor; Bykov, Alexey, Inventor; April 15, 2008; 11 pp.; In English
Contract(s)/Grant(s): NCC1-03009; Patent Info.: Filed January 24, 2006; US-Patent-7,359,415; US-Patent-Appl-SN-11/338,478; No Copyright; Avail: CASI; A03, Hardcopy
ONLINE: http://hdl.handle.net/2060/20080018810

A laser medium includes a single crystal of Cr.sup.4+:Mg.sub.2-xM.sub.xSi.sub.1-yA.sub.yO.sub.4, where, where M is a bivalent ion having an ionic radius larger than Mg.sup.2+, and A is a tetravalent ion having an ionic radius larger than Si.sup.4+. In addition, either a) 0.ltoreq.x<2 and 0<y<1 or b) 0<x<2 and y is 0 or 1 with the proviso that if M is Ca.sup.2+ and x=1 then y is not 0. The laser medium can be used in a laser device, such as a tunable near infrared (NIR) laser.
Official Gazette of the U.S. Patent and Trademark Office
Laser Materials; Single Crystals; Tunable Lasers; Alloys

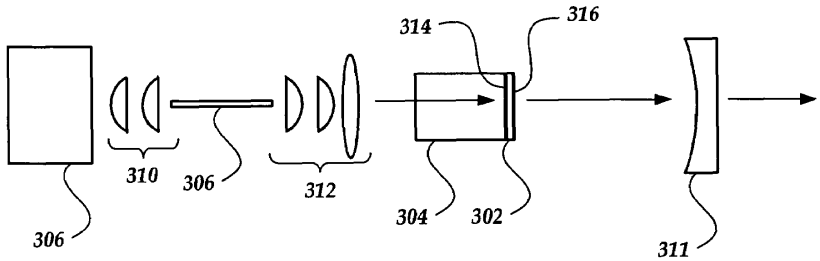

20080020313 NASA, Washington, DC USA
Communication using VCSEL laser array
Goorjian, Peter M., Inventor; February 19, 2008; 16 pp.; In English
Patent Info.: Filed June 30, 2004; US-Patent-7,333,735; US-Patent-Appl-SN-10/885,533; No Copyright; Avail: CASI; A03, Hardcopy
ONLINE: http://hdl.handle.net/2060/20080020313

Ultrafast directional beam switching, using coupled vertical cavity surface emitting lasers (VCSELs) is combined with a light modulator to provide information transfer at bit rates of tens of GHz. This approach is demonstrated to achieve beam switching frequencies of 32-50 GHz in some embodiments and directional beam switching with angular differences of about eight degrees. This switching scheme is likely to be useful for ultrafast optical networks at frequencies much higher than achievable with other approaches. A Mach-Zehnder interferometer, a Fabry-Perot etalon, or a semiconductor-based electro-absorption transmission channel, among others, can be used as a light modulator.
Official Gazette of the U.S. Patent and Trademark Office
Laser Arrays; Laser Cavities; Surface Emitting Lasers

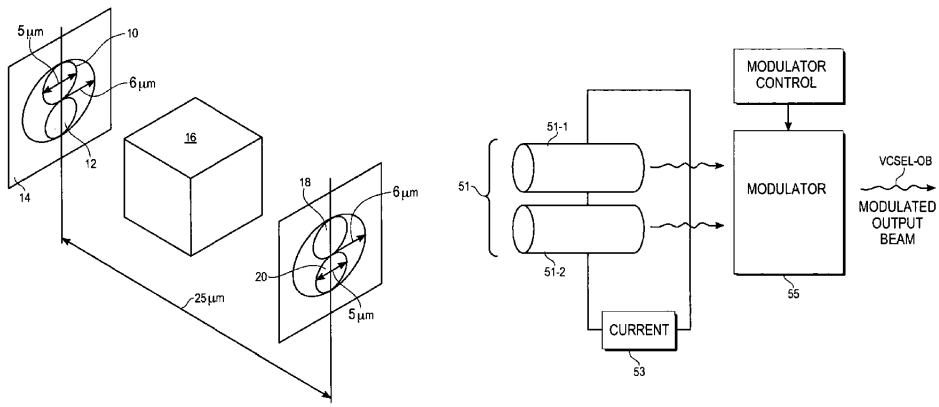

20080025648 NASA, Washington, DC USA

High speed three-dimensional laser scanner with real time processing

Lavelle, Joseph P., Inventor; Schuet, Stefan R., Inventor; May 20, 2008; 17 pp.; In English

Patent Info.: Filed September 23, 2004; US-Patent-7,375,826; US-Patent-Appl-SN-10/956,517; No Copyright; Avail: CASI; A03, Hardcopy

ONLINE: http://hdl.handle.net/2060/20080025648

A laser scanner computes a range from a laser line to an imaging sensor. The laser line illuminates a detail within an area covered by the imaging sensor, the area having a first dimension and a second dimension. The detail has a dimension perpendicular to the area. A traverse moves a laser emitter coupled to the imaging sensor, at a height above the area. The laser emitter is positioned at an offset along the scan direction with respect to the imaging sensor, and is oriented at a depression angle with respect to the area. The laser emitter projects the laser line along the second dimension of the area at a position where a image frame is acquired. The imaging sensor is sensitive to laser reflections from the detail produced by the laser line. The imaging sensor images the laser reflections from the detail to generate the image frame. A computer having a pipeline structure is connected to the imaging sensor for reception of the image frame, and for computing the range to the detail using height, depression angle and/or offset. The computer displays the range to the area and detail thereon covered by the image frame.

Official Gazette of the U.S. Patent and Trademark Office

Laser Applications; Optical Scanners; Lasers; Display Devices; Real Time Operation

37
MECHANICAL ENGINEERING

Includes mechanical devices and equipment; machine elements and processes. For cases where the application of a device or the host vehicle is emphasized see also the specific category where the application or vehicle is treated. For robotics see *63 Cybernetics, Artificial Intelligence, and Robotics*; and *54 Man/System Technology and Life Support*.

20080009449 NASA, Washington, DC USA

Thrust rollers

Vranish, John M., Inventor; August 14, 2007; 17 pp.; In English

Patent Info.: Filed June 18, 2002; US-Patent-7,255,483; US-Patent-Appl-SN-10/093,621; No Copyright; Avail: CASI; A03, Hardcopy

ONLINE: http://hdl.handle.net/2060/20080009449

A thrust roller bearing system comprising an inner rotating member, an outer rotating member and multiple rollers coupling the inner rotating member with outer rotating member. The inner and outer rotating members include thrust lips to enable the rollers to act as thrust rollers. The rollers contact inner and outer rotating members at bearing contact points along a contact line. Consequently, the radial/tilt and thrust forces move synchronously and simultaneously to create a bearing action with no slipping.

Official Gazette of the U.S. Patent and Trademark Office

Roller Bearings; Rollers; Thrust Bearings

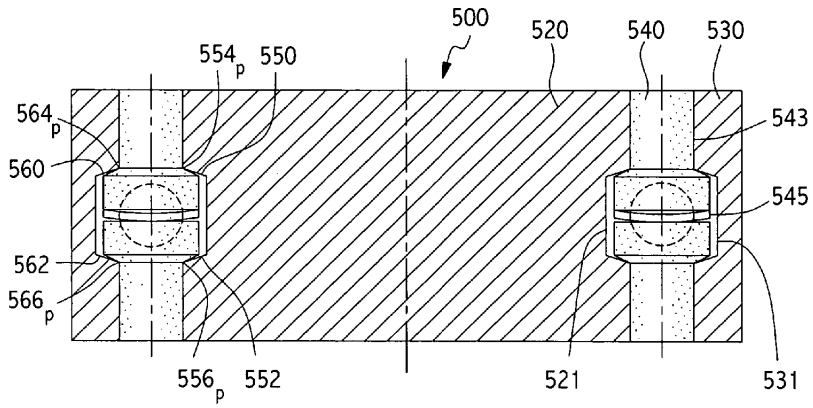

20080009458 United Technologies Corp., East Hartford, CT USA
Shaft seal assembly and method
Keba, John E., Inventor; July 31, 2007; 12 pp.; In English
Contract(s)/Grant(s): NAS8-01107; Patent Info.: Filed May 7, 2004; US-Patent-7,249,768; US-Patent-Appl-SN-10/841,652; No Copyright; Avail: CASI; A03, Hardcopy
ONLINE: http://hdl.handle.net/2060/20080009458

A pressure-actuated shaft seal assembly and associated method for controlling the flow of fluid adjacent a rotatable shaft are provided. The seal assembly includes one or more seal members that can be adjusted between open and closed positions, for example, according to the rotational speed of the shaft. For example, the seal member can be configured to be adjusted according to a radial pressure differential in a fluid that varies with the rotational speed of the shaft. In addition, in the closed position, each seal member can contact a rotatable member connected to the shaft to form a seal with the rotatable member and prevent fluid from flowing through the assembly. Thus, the seal can be closed at low speeds of operation and opened at high speeds of operation, thereby reducing the heat and wear in the seal assembly while maintaining a sufficient seal during all speeds of operation.
Official Gazette of the U.S. Patent and Trademark Office
Shafts (Machine Elements); Seals (Stoppers); Fluid Flow

20080009459 NASA, Washington, DC USA
Connector adapter
Hacker, Scott C., Inventor; Dean, Richard J., Inventor; Burge, Scott W., Inventor; Dartez, Toby W., Inventor; July 31, 2007; 10 pp.; In English
Patent Info.: Filed July 1, 2005; US-Patent-7,249,540; US-Patent-Appl-SN-11/177,652; No Copyright; Avail: CASI; A02, Hardcopy
ONLINE: http://hdl.handle.net/2060/20080009459

An adapter for installing a connector to a terminal post, wherein the connector is attached to a cable, is presented. In an embodiment, the adapter is comprised of an elongated collet member having a longitudinal axis comprised of a first collet member end, a second collet member end, an outer collet member surface, and an inner collet member surface. The inner collet member surface at the first collet member end is used to engage the connector. The outer collet member surface at the first collet member end is tapered for a predetermined first length at a predetermined taper angle. The collet includes a longitudinal slot that extends along the longitudinal axis initiating at the first collet member end for a predetermined second length. The first collet member end is formed of a predetermined number of sections segregated by a predetermined number of channels and the longitudinal slot.
Official Gazette of the U.S. Patent and Trademark Office
Adapters; Connectors; Straps

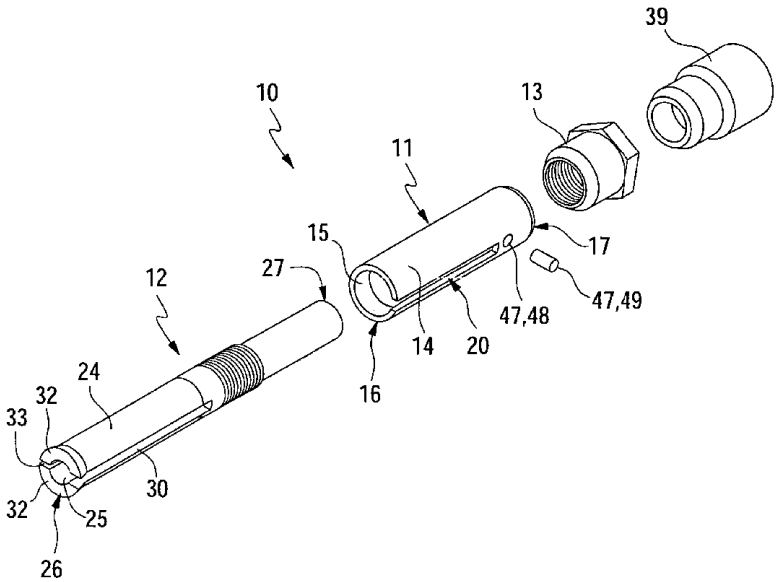

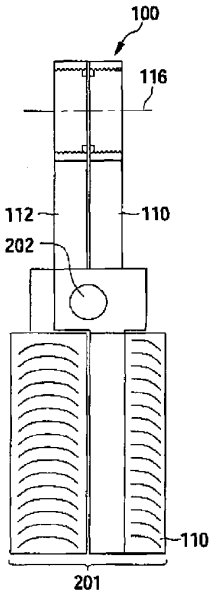

20080009489 NASA, Washington, DC USA
Screw-locking wrench
Vranish, John M., Inventor; April 24, 2007; 16 pp.; In English
Patent Info.: Filed June 30, 2005; US-Patent-7,207,245; US-Patent-Appl-SN-11/174,454; No Copyright; Avail: CASI; A03, Hardcopy
ONLINE: http://hdl.handle.net/2060/20080009489

A tool comprises a first handle and a second handle, each handle extending from a gripping end portion to a working end portion, the first handle having first screw threads disposed circumferentially about an inner portion of a first through-hole at the working end portion thereof, the second handle having second screw threads disposed circumferentially about an inner portion of a second through-hole at the working end portion thereof, the first and second respective through-holes being disposed concentrically about a common axis of the working end portions. First and second screw locks preferably are disposed concentrically with the first and second respective through-holes, the first screw lock having a plurality of locking/unlocking screw threads for engaging the first screw threads of the first handle, the second screw lock having a plurality of locking/unlocking screw threads for engaging the second screw threads of the second handle. A locking clutch drive, disposed concentrically with the first and second respective through-holes, engages the first screw lock and the second screw lock. The first handle and the second handle are selectively operable at their gripping end portions by a user using a single hand to activate the first and second screw locks to lock the locking clutch drive for either clockwise rotation about the common axis, or counter-clockwise rotation about the common axis, or to release the locking clutch drive so that the handles can be rotated together about the common axis either the clockwise or counter-clockwise direction without rotation of the locking clutch drive.
Official Gazette of the U.S. Patent and Trademark Office
Locking; Screws; Wrenches

20080009494 NASA, Washington, DC USA
Hand held device for wireless powering and interrogation of biomems sensors and actuators
Miranda, Felix Antonio, Inventor; Simons, Rainee N, Inventor; March 13, 2007; 16 pp.; In English
Patent Info.: Filed November 8, 2004; US-Patent-7,191,013; US-Patent-Appl-SN-10/983,230; No Copyright; Avail: CASI; A03, Hardcopy
ONLINE: http://hdl.handle.net/2060/20080009494

A compact, hand-held device for wireless powering, interrogation and data retrieval from at least one implanted sensor. The hand-held device includes an antenna for powering an implanted sensor and for receiving data from the implanted sensor to the hand-held device for at least one of storage, display or analysis. The hand-held device establishes electromagnetic coupling with a low radiating radio frequency power inductor in the implanted sensor at a predefined separation and the antenna geometry allows for the antenna to power, interrogate and retrieve data from the implanted sensor without strapping the hand-held device to a human body housing the implanted sensor The hand-held device optionally allows for activation of the implanted sensor only during interrogation and data retrieval.
Official Gazette of the U.S. Patent and Trademark Office
Actuators; Interrogation; Wireless Communication

20080009508 Boeing Co., Chicago, IL USA
Cloverleaf microgyroscope with electrostatic alignment and tuning
Challoner, A. Dorian, Inventor; Gutierrez, Roman C., Inventor; Tang, Tony K., Inventor; January 9, 2007; 11 pp.; In English
Patent Info.: Filed May 11, 2004; US-Patent-7,159,441; US-Patent-Appl-SN-10/843,139; No Copyright; Avail: CASI; A03, Hardcopy
ONLINE: http://hdl.handle.net/2060/20080009508

A micro-gyroscope (10) having closed loop output operation by a control voltage (V.sub.ty), that is demodulated by a drive axis (x-axis) signal V.sub.thx of the sense electrodes (S1, S2), providing Coriolis torque rebalance to prevent displacement of the micro-gyroscope (10) on the output axis (y-axis) V.sub.thy.about.0. Closed loop drive axis torque, V.sub.tx maintains a constant drive axis amplitude signal, V.sub.thx. The present invention provides independent alignment and tuning of the micro-gyroscope by using separate electrodes and electrostatic bias voltages to adjust alignment and tuning. A quadrature amplitude signal, or cross-axis transfer function peak amplitude is used to detect misalignment that is corrected to zero by an electrostatic bias voltage adjustment. The cross-axis transfer function is either V.sub.thy/V.sub.ty or V.sub.tnx/

V.sub.tx. A quadrature signal noise level, or difference in natural frequencies estimated from measurements of the transfer functions is used to detect residual mistuning, that is corrected to zero by a second electrostatic bias voltage adjustment.
Official Gazette of the U.S. Patent and Trademark Office
Alignment; Electrostatics; Gyroscopes

20080009518 Ohio Aerospace Inst., Cleveland, OH USA
Low conductivity and sintering-resistant thermal barrier coatings
Zhu, Dongming, Inventor; Miller, Robert A., Inventor; March 6, 2007; 11 pp.; In English
Contract(s)/Grant(s): NCC3-617; Patent Info.: Filed November 17, 2005; US-Patent-7,186,466; US-Patent-Appl-SN-11/282,859; No Copyright; Avail: CASI; A03, Hardcopy
ONLINE: http://hdl.handle.net/2060/20080009518

A thermal barrier coating composition is provided. The composition has a base oxide, a primary stabilizer, and at least two additional cationic oxide dopants. Preferably, a pair of group A and group B defect cluster-promoting oxides is used in conjunction with the base and primary stabilizer oxides. The new thermal barrier coating is found to have significantly lower thermal conductivity and better sintering resistance. In preferred embodiments, the base oxide is selected from zirconia and hafnia. The group A and group B cluster-promoting oxide dopants preferably are selected such that the group A dopant has a smaller cationic radius than the primary stabilizer oxide, and so that the primary stabilizer oxide has a small cationic radius than that of the group B dopant.
Official Gazette of the U.S. Patent and Trademark Office
Thermal Control Coatings; Low Conductivity

20080009641 NASA, Washington, DC USA
Friction stir weld tools
Carter, Robert W., Inventor; Payton, Lewis N., Inventor; October 2, 2007; 8 pp.; In English
Patent Info.: Filed August 20, 2004; US-Patent-7,275,675; US-Patent-Appl-SN-10/928,876; No Copyright; Avail: CASI; A02, Hardcopy
ONLINE: http://hdl.handle.net/2060/20080009641

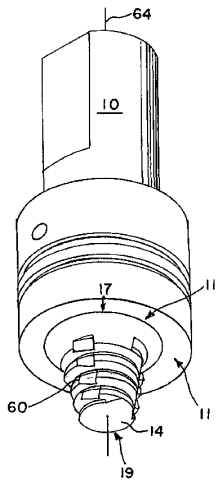

A friction stir weld tool sleeve is supported by an underlying support pin. The pin material is preferably selected for toughness and fracture characteristics. The pin sleeve preferably has a geometry which employs the use of an interrupted thread, a plurality of flutes and/or eccentric path to provide greater flow through. Paddles have been found to assist in imparting friction and directing plastic metal during the welding process.
Official Gazette of the U.S. Patent and Trademark Office
Friction Stir Welding; Pins; Sleeves

20080009743 NASA Marshall Space Flight Center, Huntsville, AL, USA
Cushion System for Multi-Use Child Safety Seat
Dabney, Richard W., Inventor; Elrod, Susan V., Inventor; October 23, 2007; 7 pp.; In English; Original contains black and white illustrations
Patent Info.: Filed 28 Jan. 2005; US-Patent-7,284,792; US-Patent-Appl-SN-11/047342; NASA-Case-MFS-31771-1; No Copyright; Avail: CASI; A02, Hardcopy
ONLINE: http://hdl.handle.net/2060/20080009743

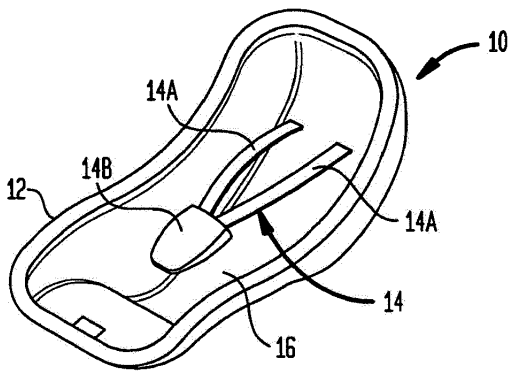

A cushion system for use with a child safety seat has a plurality of bladders assembled to form a seat cushion that cooperates with the seat's safety harness. One or more sensors coupled to the safety harness sense tension therein and generate a signal indicative of the tension. Each of the bladders is individually pressurized by a pressurization system to define a support configuration of the seat cushion. The pressurization system is disabled when tension in the safety harness has attained a threshold level.
Official Gazette of the U.S. Patent and Trademark Office
Cushions; Harnesses; Seats; Safety Devices

20080009745 NASA Marshall Space Flight Center, Huntsville, AL, USA

Friction Stir Weld Tools

Carter, Robert W., Inventor; Payton, Lewis N., Inventor; October 07, 2007; 8 pp.; In English; Original contains black and white illustrations; US-Patent-7,275,675; US-Patent-Appl-SN-10/928876; NASA-Case-MFS-31918-1; No Copyright; Avail: CASI; A02, Hardcopy

ONLINE: http://hdl.handle.net/2060/20080009745

A friction stir weld tool sleeve is supported by an underlying support pin. The pin material is preferably selected for toughness and fracture characteristics. The pin sleeve preferably has a geometry which employs the use of an interrupted thread, a plurality of flutes and/or eccentric path to provide greater flow through. Paddles have been found to assist in imparting friction and directing plastic metal during the welding process.

Official Gazette of the U.S. Patent and Trademark Office

Friction Stir Welding; Welding; Tools

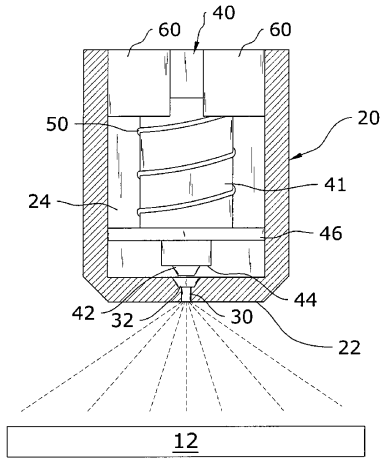

20080018822 Isothermal Systems Research, Inc., Liberty Lake, WA USA

Atomizer for thermal management system

Tilton, Charles L., Inventor; Weiler, Jeff, Inventor; Palmer, Randal T., Inventor; Appel, Philip W., Inventor; Knight, Paul A., Inventor; January 1, 2008; 15 pp.; In English

Contract(s)/Grant(s): NAS8-40644; Patent Info.: Filed June 3, 2004; US-Patent-7,313,925; US-Patent-Appl-SN-10/861,333; No Copyright; Avail: CASI; A03, Hardcopy

ONLINE: http://hdl.handle.net/2060/20080018822

An atomizer for thermal management system for efficiently thermally managing one or more heat producing devices. The atomizer for thermal management system includes a housing having a coolant passage and a dispensing end, an orifice within the dispensing end, and an actuator manipulating a plunger within the housing. The plunger includes a head that is sealable within a recessed portion of the orifice to open or close the orifice. The coolant passes through the coolant passage into the orifice for spraying upon a heat producing device. The actuator may reciprocate so that the coolant spray emitted through the orifice is pulsating. The pulsing frequency may be increased to increase cooling or decreased to decrease cooling of the heat producing device.

Official Gazette of the U.S. Patent and Trademark Office

Atomizers; Management Systems; Temperature Control

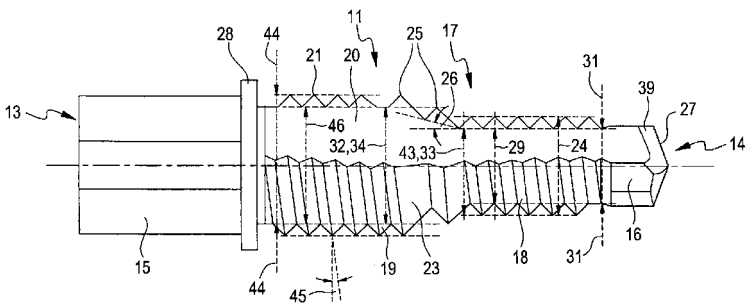

20080020312 NASA, Washington, DC USA

Self-advancing step-tap tool

Pettit, Donald R., Inventor; Penner, Ronald K., Inventor; Franklin, Larry D., Inventor; Camarda, Charles J., Inventor; April 15, 2008; 13 pp.; In English

Patent Info.: Filed February 3, 2006; US-Patent-7,357,606; US-Patent-Appl-SN-11/357,461; No Copyright; Avail: CASI; A03, Hardcopy

ONLINE: http://hdl.handle.net/2060/20080020312

Methods and tool for simultaneously forming a bore in a work piece and forming a series of threads in said bore. In an embodiment, the tool has a predetermined axial length, a proximal end, and a distal end, said tool comprising: a shank located at said proximal end; a pilot drill portion located at said distal end; and a mill portion intermediately disposed between said shank and said pilot drill portion. The mill portion is comprised of at least two drill-tap sections of predetermined axial lengths and at least one transition section of predetermined axial length, wherein each of said at least one transition section is sandwiched between a distinct set of two of said at least two drill-tap sections. The at least two drill-tap sections are formed of one or more drill-tap cutting teeth spirally increasing along said at least two drill-tap sections, wherein said tool is self-advanced in said work piece along said formed threads, and wherein said tool simultaneously forms said bore and said series of threads along a substantially similar longitudinal axis.

Official Gazette of the U.S. Patent and Trademark Office

Cavities; Threads; Drills; Drill Bits

20080020428

Supercharged two-cycle engines employing novel single element reciprocating shuttle inlet valve mechanisms and with a variable compression ratio

Wiesen, Bernard, Inventor; March 11, 2008; 24 pp.; In English

Contract(s)/Grant(s): NAS3-01035; Patent Info.: Filed July 14, 2006; US-Patent-7,341,040; US-Patent-Appl-SN-11/486,460; No Copyright; Avail: CASI; A03, Hardcopy

ONLINE: http://hdl.handle.net/2060/20080020428

This invention relates to novel reciprocating shuttle inlet valves, effective with every type of two-cycle engine, from small high-speed single cylinder model engines, to large low-speed multiple cylinder engines, employing spark or compression ignition. Also permitting the elimination of out-of-phase piston arrangements to control scavenging and supercharging of opposed-piston engines. The reciprocating shuttle inlet valve (32) and its operating mechanism (34) is constructed as a single and simple uncomplicated member, in combination with the lost-motion abutments, (46) and (48), formed in a piston skirt, obviating the need for any complex mechanisms or auxiliary drives, unaffected by heat, friction, wear or inertial forces. The reciprocating shuttle inlet valve retains the simplicity and advantages of two-cycle engines, while permitting an increase in volumetric efficiency and performance, thereby increasing the range of usefulness of two-cycle engines into many areas that are now dominated by the four-cycle engine.

Official Gazette of the U.S. Patent and Trademark Office

Internal Combustion Engines; Superchargers; Reciprocation; Volumetric Efficiency; Valves; Engine Design

20080020439 NASA, Washington, DC USA

System and method of analyzing vibrations and identifying failure signatures in the vibrations

Huang, Norden E., Inventor; Salvino, Liming W., Inventor; March 18, 2008; 30 pp.; In English

Patent Info.: Filed September 30, 2005; US-Patent-7,346,461; US-Patent-Appl-SN-11/251,004; No Copyright; Avail: CASI; A03, Hardcopy

ONLINE: http://hdl.handle.net/2060/20080020439

An apparatus, computer program product and method of analyzing structures. Intrinsic Mode Functions (IMFs) are extracted from the data and the most energetic IMF is selected. A spline is fit to the envelope for the selected IMF. The spline derivative is determined. A stability spectrum is developed by separating the positive and negative results into two different spectra representing stable (positive) and unstable (negative) damping factors. The stability spectrum and the non-linearity indicator are applied to the data to isolate unstable vibrations.

Official Gazette of the U.S. Patent and Trademark Office

Vibration; Identifying; Signatures; Damping; Computer Programs

20080020442 NASA, Washington, DC USA

Underwater vehicle propulsion and power generation

Jones, Jack A., Inventor; Chao, Yi, Inventor; April 8, 2008; 5 pp.; In English

Patent Info.: Filed July 10, 2006; US-Patent-7,353,768; US-Patent-Appl-SN-11/456,441; No Copyright; Avail: CASI; A01, Hardcopy

ONLINE: http://hdl.handle.net/2060/20080020442

An underwater vehicle includes a shaft with a propeller disposed thereon; a generator/motor having a stator and a rotor, the rotor being operable to rotate with the propeller; at least one energy storage device connected to the generator/motor; and a controller for setting the generator/motor in a charge mode, a propulsion mode and an idle mode.

Official Gazette of the U.S. Patent and Trademark Office

Underwater Vehicles; Propellers; Shafts (Machine Elements); Energy Storage; Controllers

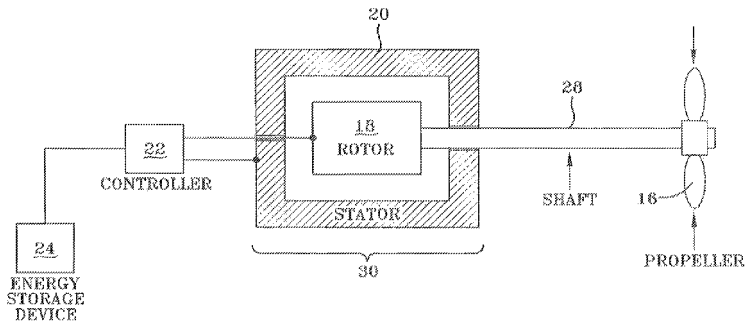

38
QUALITY ASSURANCE AND RELIABILITY

Includes approaches to, and methods for reliability analysis and control, quality control, inspection, maintainability, and standardization.

20080009636 General Electric Co., Schenectady, NY USA
Method and apparatus for in-situ detection and isolation of aircraft engine faults
Bonanni, Pierino Gianni, Inventor; Brunell, Brent Jerome, Inventor; October 9, 2007; 14 pp.; In English
Contract(s)/Grant(s): NAS3-01135; Patent Info.: Filed December 29, 2004; US-Patent-7,280,941; US-Patent-Appl-SN-11/025,145; No Copyright; Avail: CASI; A03, Hardcopy
ONLINE: http://hdl.handle.net/2060/20080009636

A method for performing a fault estimation based on residuals of detected signals includes determining an operating regime based on a plurality of parameters, extracting predetermined noise standard deviations of the residuals corresponding to the operating regime and scaling the residuals, calculating a magnitude of a measurement vector of the scaled residuals and comparing the magnitude to a decision threshold value, extracting an average, or mean direction and a fault level mapping for each of a plurality of fault types, based on the operating regime, calculating a projection of the measurement vector onto the average direction of each of the plurality of fault types, determining a fault type based on which projection is maximum, and mapping the projection to a continuous-valued fault level using a lookup table.
Official Gazette of the U.S. Patent and Trademark Office
In Situ Measurement; Fault Detection; Aircraft Engines; Engine Design

39
STRUCTURAL MECHANICS

Includes structural element design, analysis and testing; dynamic responses of structures; weight analysis; fatigue and other structural properties; and mechanical and thermal stresses in structures. For applications see *05 Aircraft Design, Testing and Performance*; and *18 Spacecraft Design, Testing and Performance*.

20080009622 Michigan Univ., Ann Arbor, MI USA
Thermal modulation for gas chromatography
Hasselbrink, Ernest F., Inventor; Libardoni, Mark, Inventor; Stewart, Kristine, Inventor; Waite, J. Hunter, Inventor; Block, Bruce P., Inventor; Sacks, Richard D., Inventor; November 13, 2007; 17 pp.; In English
Contract(s)/Grant(s): NAG5-12171; Patent Info.: Filed May 23, 2005; US-Patent-7,293,449; US-Patent-Appl-SN-11/134,873; No Copyright; Avail: CASI; A03, Hardcopy
ONLINE: http://hdl.handle.net/2060/20080009622

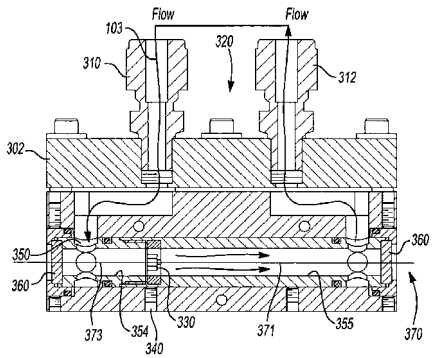

A thermal modulator device for gas chromatography and associated methods. The thermal modulator device includes a recirculating fluid cooling member, an electrically conductive capillary in direct thermal contact with the cooling member, and a power supply electrically coupled to the capillary and operable for controlled resistive heating of the capillary. The capillary can include more than one separate thermally modulated sections.
Official Gazette of the U.S. Patent and Trademark Office
Gas Chromatography; Temperature Control; Modulators

20080018816 NASA, Washington, DC USA
Active multistable twisting device
Schultz, Marc R., Inventor; January 22, 2008; 14 pp.; In English
Patent Info.: Filed March 6, 2006; US-Patent-7,321,185; US-Patent-Appl-SN-11/370,377; No Copyright; Avail: CASI; A03, Hardcopy
ONLINE: http://hdl.handle.net/2060/20080018816

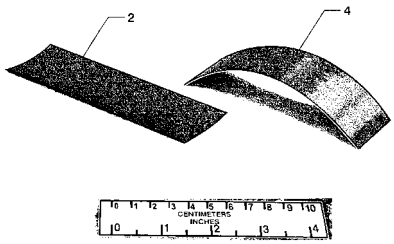

Two similarly shaped, such as rectangular, shells are attached to one another such that they form a resulting thin airfoil-like structure. The resulting device has at least two stable equilibrium shapes. The device can be transformed from one shape to another with a snap-through action. One or more actuators can be used to effect the snap-through; i.e., transform the device from one stable shape to another. Power to the actuators is needed only to transform the device from one shape to another.
Official Gazette of the U.S. Patent and Trademark Office
Actuators; Shapes; Twisting; Dynamic Stability

43
EARTH RESOURCES AND REMOTE SENSING

Includes remote sensing of earth features, phenomena and resources by aircraft, balloon, rocket, and spacecraft; analysis of remote sensing data and imagery; development of remote sensing products; photogrammetry; and aerial photography. For related instrumentation see *35 Instrumentation and Photography*.

20080009497 InTime, Inc., Cleveland, MS USA

Method and system for spatially variable rate application of agricultural chemicals based on remotely sensed vegetation data

Hood, Kenneth Brown, Inventor; Seal, Michael R., Inventor; Lewis, Mark David, Inventor; Johnson, James William, Inventor; February 27, 2007; 15 pp.; In English

Contract(s)/Grant(s): NCC13-0001; Patent Info.: Filed July 10, 2004; US-Patent-7,184,859; US-Patent-Appl-SN-10/888,932; No Copyright; Avail: CASI; A03, Hardcopy

ONLINE: http://hdl.handle.net/2060/20080009497

Remotely sensed spectral image data are used to develop a Vegetation Index file which represents spatial variations of actual crop vigor throughout a field that is under cultivation. The latter information is processed to place it in a format that can be used by farm personnel to correlate and calibrate it with actually observed crop conditions existing at control points within the field. Based on the results, farm personnel formulate a prescription request, which is forwarded via email or FTP to a central processing site, where the prescription is prepared. The latter is returned via email or FTP to on-side farm personnel, who can load it into a controller on a spray rig that directly applies inputs to the field at a spatially variable rate. Official Gazette of the U.S. Patent and Trademark Office

Agriculture; Crop Vigor; Remote Sensing; Vegetation

44
ENERGY PRODUCTION AND CONVERSION

Includes specific energy conversion systems, e.g., fuel cells; and solar, geothermal, windpower, and waterwave conversion systems; energy storage; and traditional power generators. For technologies related to nuclear energy production see *73 Nuclear Physics*. For related information see also *07 Aircraft Propulsion and Power; 20 Spacecraft Propulsion and Power*; and *28 Propellants and Fuels*.

20080009634 California Inst. of Tech., Pasadena, CA USA

Water free proton conducting membranes based on poly-4-vinylpyridinebisulfate for fuel cells

Narayanan, Sekharipuram R., Inventor; Yen, Shiao-Pin S., Inventor; October 16, 2007; 12 pp.; In English

Contract(s)/Grant(s): NAS7-1407; Patent Info.: Filed November 24, 2003; US-Patent-7,282,291; US-Patent-Appl-SN-10/722,352; No Copyright; Avail: CASI; A03, Hardcopy

ONLINE: http://hdl.handle.net/2060/20080009634

Disclosed are methods for forming a water-free electrolyte membrane useful in fuel cells. Also provided is a water-free electrolyte membrane comprising a quaternized amine salt including poly-4-vinylpyridinebisulfate, a poly-4-vinylpyridinebisulfate silica composite, and a combination thereof and a fuel cell comprising the membrane.

Official Gazette of the U.S. Patent and Trademark Office

Electrolytes; Fuel Cells; Membranes; Protons; Electrochemical Synthesis

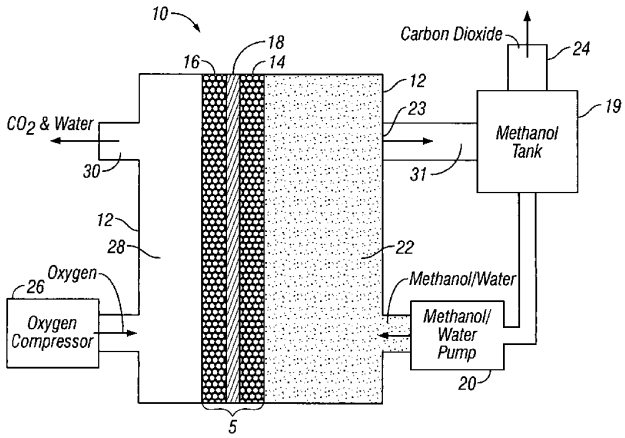

20080023616 NEI Corp., Piscataway, NJ, USA

Method of making fine lithium iron phosphate/carbon-based powders with an olivine type structure

Singhal, Amit, Inventor; Dhamne, Abhijeet, Inventor; Skandan, Ganesh, Inventor; June 24, 2008; 12 pp.; In English

Contract(s)/Grant(s): NNG04CA24C; Patent Info.: Filed June 24, 2005; US-Patent-7,390,473; US-Patent-Appl-SN-11/165,926; No Copyright; Avail: CASI; A03, Hardcopy

ONLINE: http://hdl.handle.net/2060/20080023616

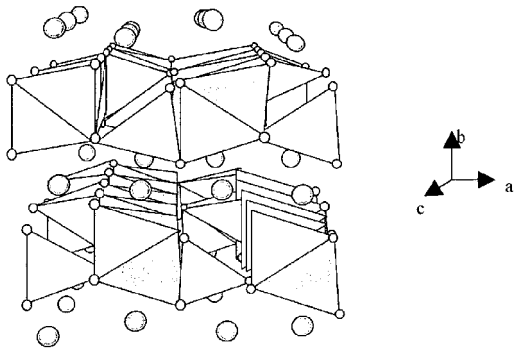

Processes for producing fine LiFePO.sub.4/C and nanostructured LiFe.sub.xM.sub.1-xPO.sub.4/C composite powders, where 1.ltoreq.x. ltoreq.0.1 and M is a metal cation. Electrodes made of either nanostructured LiFe.sub.xM.sub.1-xPO.sub.4 powders or nanostructured LiFe.sub.xM.sub.1-xPO.sub.4/C composite powders exhibit excellent electrochemical properties. That will provide high power density, low cost and environmentally friendly rechargeable Li-ion batteries.

Official Gazette of the U.S. Patent and Trademark Office

Nanocrystals; Lithium Batteries; Lithium Compounds; Powder (Particles)

45
ENVIRONMENT POLLUTION

Includes atmospheric, water, soil, noise, and thermal pollution.

20080009431 Texas A&M Univ., College Station, TX USA

Compositions and methods for removal of toxic metals and radionuclides

Cuero, Raul G., Inventor; McKay, David S., Inventor; December 18, 2007; 10 pp.; In English

Contract(s)/Grant(s): NAG9-1241; Patent Info.: Filed January 6, 2005; US-Patent-7,309,437; US-Patent-Appl-SN-11/031,088; No Copyright; Avail: CASI; A02, Hardcopy

ONLINE: http://hdl.handle.net/2060/20080009431

The present invention relates to compositions and methods for the removal of toxic metals or radionuclides from source materials. Toxic metals may be removed from source materials using a clay, such as attapulgite or highly cationic bentonite, and chitin or chitosan. Toxic metals may also be removed using volcanic ash alone or in combination with chitin or chitosan. Radionuclides may be removed using volcanic ash alone or in combination with chitin or chitosan.

Official Gazette of the U.S. Patent and Trademark Office

Metals; Radioactive Isotopes; Toxicity; Removal; Waste Treatment

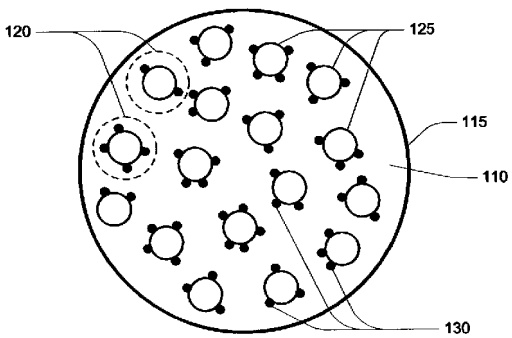

20080009643 NASA, Washington, DC USA

Removal of PCB and other halogenated organic contaminants found in ex situ structures

Quinn, Jacqueline, Inventor; Clausen, Christian, Inventor; Geiger, Cherie L., Inventor; Coon, Christina, Inventor; Berger, Cristina M., Inventor; Filipek, Laura B., Inventor; Milum, Kristen M., Inventor; September 18, 2007; 6 pp.; In English

Patent Info.: Filed October 27, 2004; US-Patent-7,271,199; US-Patent-Appl-SN-10/977,622; No Copyright; Avail: CASI; A02, Hardcopy

ONLINE: http://hdl.handle.net/2060/20080009643

Emulsified systems of a surfactant-stabilized, biodegradable water-in-solvent emulsion with bimetallic particles contained with the emulsion droplets are useful at removing PCBs from ex situ structures. The hydrophobic emulsion system draws PCBs through the solvent/surfactant membrane. Once inside the membrane, the PCBs diffuse into the bimetallic particles and undergo degradation. The PCBs continue to enter, diffuse, degrade, and biphenyl will exit the particle maintaining a concentration gradient across the membrane and maintaining a driving force of the reaction.

Official Gazette of the U.S. Patent and Trademark Office

Polychlorinated Biphenyls; Contaminants; Emulsions; Decontamination

51
LIFE SCIENCES (GENERAL)

Includes general research topics related to plant and animal biology (non-human); ecology; microbiology; and also the origin, development, structure, and maintenance of animals and plants in space and related environmental conditions. For specific topics in life sciences see *categories 52 through 55*.

20080008719 California Inst. of Tech., Pasadena, CA USA
Bacillus pumilus SAFR-032 isolate
Venkateswaran, Kasthuri J., Inventor; August 28, 2007; 9 pp.; In English
Patent Info.: Filed May 6, 2005; US-Patent-7,262,047; US-Patent-Appl-SN-11/124,414; No Copyright; Avail: CASI; A02, Hardcopy
ONLINE: http://hdl.handle.net/2060/20080008719

The present invention relates to discovery and isolation of a biologically pure culture of a Bacillus pumilus SAFR-032 isolate with UV sterilization resistant properties. This novel strain has been characterized on the basis of phenotypic traits, 16S rDNA sequence analysis and DNA-DNA hybridization. According to the results of these analyses, this strain belongs to the genus Bacillus. The GenBank accession number for the 16S rDNA sequence of the Bacillus pumilus SAFR-032 isolate is AY167879.
Official Gazette of the U.S. Patent and Trademark Office
Bacillus; Deoxyribonucleic Acid; Isolation; Sterilization; Ultraviolet Radiation

20080009434 California Inst. of Tech., Pasadena, CA USA
Method bacterial endospore quantification using lanthanide dipicolinate luminescence
Ponce, Adrian, Inventor; Venkateswaran, Kasthuri J., Inventor; Kirby, James Patrick, Inventor; December 11, 2007; 12 pp.; In English
Contract(s)/Grant(s): NAS7-1407; Patent Info.: Filed November 27, 2002; US-Patent-7,306,930; US-Patent-Appl-SN-10/306,331; No Copyright; Avail: CASI; A03, Hardcopy
ONLINE: http://hdl.handle.net/2060/20080009434

A lanthanide is combined with a medium to be tested for endospores. The dipicolinic acid released from the endospores binds the lanthanides, which have distinctive emission (i.e., luminescence) spectra, and are detected using photoluminescence. The concentration of spores is determined by preparing a calibration curve generated from photoluminescence spectra of lanthanide complex mixed with spores of a known concentration. A lanthanide complex is used as the analysis reagent, and is comprised of lanthanide ions bound to multidentate ligands that increase the dipicolinic acid binding constant through a cooperative binding effect with respect to lanthanide chloride. The resulting combined effect of increasing the binding constant and eliminating coordinated water and multiple equilibria increase the sensitivity of the endospore assay by an estimated three to four orders of magnitude over prior art of endospore detection based on lanthanide luminescence.
Official Gazette of the U.S. Patent and Trademark Office
Rare Earth Elements; Luminescence; Bacteria; Spores; Detection; Sterilization

20080009466 Wyoming Univ., Laramie, WY USA
Template reporter bacteriophage platform and multiple bacterial detection assays based thereon
Goodridge, Lawrence, Inventor; July 17, 2007; 9 pp.; In English
Contract(s)/Grant(s): NCC5-578; Patent Info.: Filed October 7, 2005; US-Patent-7,244,612; US-Patent-Appl-SN-11/246,779; No Copyright; Avail: CASI; A02, Hardcopy
ONLINE: http://hdl.handle.net/2060/20080009466

The invention is a method for the development of assays for the simultaneous detection of multiple bacteria. A bacteria of interest is selected. A host bacteria containing plasmid DNA from a T even bacteriophage that infects the bacteria of interest is infected with T4 reporter bacteriophage. After infection, the progeny bacteriophage are plating onto the bacteria of interest. The invention also includes single-tube, fast and sensitive assays which utilize the novel method.
Official Gazette of the U.S. Patent and Trademark Office
Bacteria; Bacteriophages; Templates

20080009496 California Inst. of Tech., Pasadena, CA USA

Bacillus odysseyi isolate

Venkateswaran, Kasthuri, Inventor; La Duc, Myron Thomas, Inventor; March 13, 2007; 11 pp.; In English

Contract(s)/Grant(s): NAS7-1407; Patent Info.: Filed January 17, 2004; US-Patent-7,189,556; US-Patent-Appl-SN-10/759,327; No Copyright; Avail: CASI; A03, Hardcopy

ONLINE: http://hdl.handle.net/2060/20080009496

The present invention relates to discovery and isolation of a biologically pure culture of a Bacillus odysseyi isolate with high adherence and sterilization resistant properties. B. odysseyi is a round spore forming Bacillus species that produces an exosporium. This novel species has been characterized on the basis of phenotypic traits, 16S rDNA sequence analysis and DNA-DNA hybridization. According to the results of these analyses, this strain belongs to the genus Bacillus and the type strain is 34hs-1.sup.T (=ATCC PTA-4993.sup.T=NRRL B-30641.sup.T=NBRC 100172.sup.T). The GenBank accession number for the 16S rDNA sequence of strain 34hs-1.sup.T is AF526913.

Official Gazette of the U.S. Patent and Trademark Office

Bacillus; Isolation; Cell Culturing

20080009498 Wisconsin Alumni Research Foundation, Madison, WI USA

Struvite crystallization

Barak, Phillip W., Inventor; Tabanpour, Menachem E., Inventor; Avila-Segura, Mauricio, Inventor; Meyer, Juliane M., Inventor; February 27, 2007; 28 pp.; In English

Patent Info.: Filed July 28, 2004; US-Patent-7,182,872; US-Patent-Appl-SN-10/710,686; No Copyright; Avail: CASI; A03, Hardcopy

ONLINE: http://hdl.handle.net/2060/20080009498

The present invention provides a method and apparatus for removing phosphorus from phosphorus containing waste. In one embodiment, the method is preferably carried out by contacting the phosphorus containing waste with a non-cellular membrane and precipitating phosphorus from the waste as struvite. Another aspect of the invention includes a method of removing phosphorus from phosphorus containing sewage comprising filtrates and biosolids. The removal of phosphorus as struvite occurs in two stages as primary and secondary removal. In the primary removal process, the sewage from a dewatering unit is contacted with a first polymeric membrane reactor and the phosphorus is removed as primary struvite. Subsequently Mg is added so as promote struvite formation and the secondary removal process of struvite. In the secondary removal process, the sewage from GBT Filtrate well or Centrifuge Liquor well is contacted with a second monomolecular membrane and the phosphorus is removed as secondary struvite.

Official Gazette of the U.S. Patent and Trademark Office

Crystallization; Phosphorus; Wastes

20080009499 Vermont Univ., Burlington, VT USA

Whole-body mathematical model for simulating intracranial pressure dynamics

Lakin, William D., Inventor; Penar, Paul L., Inventor; Stevens, Scott A., Inventor; Tranmer, Bruce I., Inventor; February 27, 2007; 29 pp.; In English

Contract(s)/Grant(s): NGT5-40110; NCC5-581; Patent Info.: Filed September 9, 2003; US-Patent-7,182,602; US-Patent-Appl-SN-10/658,638; No Copyright; Avail: CASI; A03, Hardcopy

ONLINE: http://hdl.handle.net/2060/20080009499

A whole-body mathematical model (10) for simulating intracranial pressure dynamics. In one embodiment, model (10) includes 17 interacting compartments, of which nine lie entirely outside of intracranial vault (14). Compartments (F) and (T) are defined to distinguish ventricular from extraventricular CSF. The vasculature of the intracranial system within cranial vault (14) is also subdivided into five compartments (A, C, P, V, and S, respectively) representing the intracranial arteries, capillaries, choroid plexus, veins, and venous sinus. The body's extracranial systemic vasculature is divided into six compartments (I, J, O, Z, D, and X, respectively) representing the arteries, capillaries, and veins of the central body and the lower body. Compartments (G) and (B) include tissue and the associated interstitial fluid in the intracranial and lower regions. Compartment (Y) is a composite involving the tissues, organs, and pulmonary circulation of the central body and compartment (M) represents the external environment.

Official Gazette of the U.S. Patent and Trademark Office

Intracranial Pressure; Mathematical Models; Simulation

20080009501 Regenetech, Inc., Sugar Land, TX USA

Apparatus for enhancing tissue repair in mammals

Goodwin, Thomas J., Inventor; Parker, Clayton R., Inventor; February 20, 2007; 6 pp.; In English

Patent Info.: Filed June 29, 2005; US-Patent-7,179,217; US-Patent-Appl-SN-11/169,614; No Copyright; Avail: CASI; A02, Hardcopy

ONLINE: http://hdl.handle.net/2060/20080009501

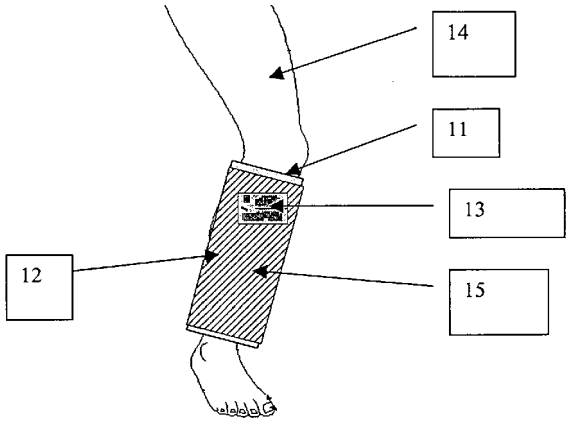

An apparatus is disclosed for enhancing tissue repair in mammals, with the apparatus comprising: a sleeve for encircling a portion of a mammalian body part, said sleeve comprising an electrically conductive coil capable of generating an electromagnetic field when an electrical current is applied thereto, means for supporting the sleeve on the mammalian body part; and means for supplying the electrically conductive coil with a square wave time varying electrical current sufficient to create a time varying electromagnetic force of from approximately 0.05 gauss to 0.05 gauss within the interior of the coil in order that when the sleeve is placed on a mammalian body part and the time varying electromagnetic force of from approximately 0.05 gauss to 0.05 gauss is generated on the mammalian body part for an extended period of time, tissue regeneration within the mammalian body part is increased to a rate in excess of the normal tissue regeneration rate that would occur without application of the time varying electromagnetic force.

Official Gazette of the U.S. Patent and Trademark Office

Tissues (Biology); Mammals

20080009513 Space Hardware Optimization Technology, Inc., Greenville, IN USA

Apparatus and method for centrifugation and robotic manipulation of samples

Vellinger, John C., Inventor; Ormsby, Rachel A., Inventor; Kennedy, David J., Inventor; Thomas, Nathan A., Inventor; Shulthise, Leo A., Inventor; Kurk, Michael A., Inventor; Metz, George W., Inventor; August 28, 2007; 33 pp.; In English

Contract(s)/Grant(s): NAS2-96022; Patent Info.: Filed October 15, 2002; US-Patent-7,261,860; US-Patent-Appl-SN-10/270,977; No Copyright; Avail: CASI; A03, Hardcopy

ONLINE: http://hdl.handle.net/2060/20080009513

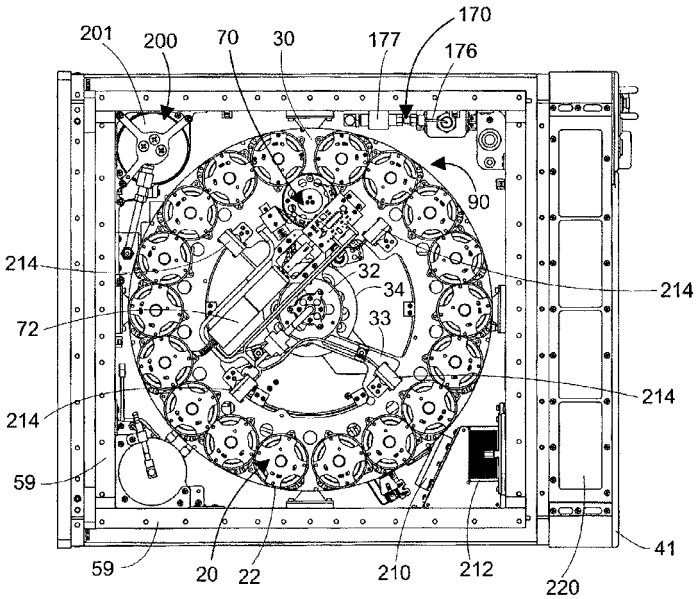

A device for centrifugation and robotic manipulation of specimen samples, including incubating eggs, and uses thereof are provided. The device may advantageously be used for the incubation of avian, reptilian or any type of vertebrate eggs. The apparatus comprises a mechanism for holding samples individually, rotating them individually, rotating them on a centrifuge collectively, injecting them individually with a fixative or other chemical reagent, and maintaining them at controlled temperature, relative humidity and atmospheric composition. The device is applicable to experiments involving entities other than eggs, such as invertebrate specimens, plants, microorganisms and molecular systems.

Official Gazette of the U.S. Patent and Trademark Office

Centrifuging; Robotics; Microorganisms; Vertebrates

20080009524 NASA, Washington, DC USA

Production of functional proteins: balance of shear stress and gravity

Goodwin, Thomas John, Inventor; Hammond, Timothy Grant, Inventor; Kaysen, James Howard, Inventor; April 3, 2007; 30 pp.; In English

Patent Info.: Filed December 11, 2003; US-Patent-7,198,947; US-Patent-Appl-SN-10/734,759; No Copyright; Avail: CASI; A03, Hardcopy

ONLINE: http://hdl.handle.net/2060/20080009524

The present invention provides a method for production of functional proteins including hormones by renal cells in a three dimensional co-culture process responsive to shear stress using a rotating wall vessel. Natural mixture of renal cells expresses the enzyme 1-a-hydroxylase which can be used to generate the active form of vitamin D: 1,25-diOH vitamin D3. The fibroblast cultures and co-culture of renal cortical cells express the gene for erythropoietin and secrete erythropoietin into the culture supernatant. Other shear stress response genes are also modulated by shear stress, such as toxin receptors megalin and cubulin (gp280). Also provided is a method of treating in-need individual with the functional proteins produced in a three dimensional co-culture process responsive to shear stress using a rotating wall vessel.
Official Gazette of the U.S. Patent and Trademark Office
Protein Synthesis; Gravitation; Shear Stress

20080018818 Colgate-Palmolive Co., New York, NY USA
Computer-implemented system and method for automated and highly accurate plaque analysis, reporting, and visualization
Kemp, James Herbert, Inventor; Talukder, Ashit, Inventor; Lambert, James, Inventor; Lam, Raymond, Inventor; January 29, 2008; 19 pp.; In English
Patent Info.: Filed April 30, 2004; US-Patent-7,324,661; US-Patent-Appl-SN-10/836,567; No Copyright; Avail: CASI; A03, Hardcopy
ONLINE: http://hdl.handle.net/2060/20080018818

A computer-implemented system and method of intra-oral analysis for measuring plaque removal is disclosed. The system includes hardware for real-time image acquisition and software to store the acquired images on a patient-by-patient basis. The system implements algorithms to segment teeth of interest from surrounding gum, and uses a real-time image-based morphing procedure to automatically overlay a grid onto each segmented tooth. Pattern recognition methods are used to classify plaque from surrounding gum and enamel, while ignoring glare effects due to the reflection of camera light and ambient light from enamel regions. The system integrates these components into a single software suite with an easy-to-use graphical user interface (GUI) that allows users to do an end-to-end run of a patient record, including tooth segmentation of all teeth, grid morphing of each segmented tooth, and plaque classification of each tooth image.
Official Gazette of the U.S. Patent and Trademark Office
Enamels; Gums (Substances); Image Analysis; Teeth; Tooth Diseases; Dental Calculi

20080025639 NASA, Washington, DC USA
Method and apparatus to assess compartment syndrome
Ueno, Toshiaki, Inventor; Hargens, Alan R., Inventor; Yost, William T., Inventor; June 3, 2008; 12 pp.; In English
Patent Info.: Filed August 2, 2004; US-Patent-7,381,186; US-Patent-Appl-SN-10/911,755; No Copyright; Avail: CASI; A03, Hardcopy
ONLINE: http://hdl.handle.net/2060/20080025639

A method and apparatus for measuring pressure buildup in a body compartment that encases muscular tissue. The method includes assessing the body compartment configuration and identifying the effect of pulsatile components on at least one compartment dimension. This process is used in preventing tissue necrosis, and in decisions of whether to perform surgery on the body compartment for prevention of Compartment Syndrome. An apparatus is used for measuring excess pressure in the body compartment having components for imparting ultrasonic waves such as a transducer, placing the transducer to impart the ultrasonic waves, capturing the reflected imparted ultrasonic waves, and converting them to electrical signals, a pulsed phase-locked loop device for assessing a body compartment configuration and producing an output signal, and means for mathematically manipulating the output signal to thereby categorize pressure build-up in the body compartment from the mathematical manipulations.
Official Gazette of the U.S. Patent and Trademark Office
Compartments; Pressure Measurement; Phase Locked Systems; Tissues (Biology); Muscles

20080025689 NASA, Washington, DC USA
Protective coating and hyperthermal atomic oxygen texturing of optical fibers used for blood glucose monitoring
Banks, Bruce A., Inventor; June 3, 2008; 16 pp.; In English
Patent Info.: Filed July 14, 2006; US-Patent-7,382,944; US-Patent-Appl-SN-11/489,813; No Copyright; Avail: CASI; A03, Hardcopy
ONLINE: http://hdl.handle.net/2060/20080025689

Disclosed is a method of producing cones and pillars on polymethylmethacralate (PMMA) optical fibers for glucose monitoring. The method, in one embodiment, consists of using electron beam evaporation to deposit a non-contiguous thin

film of aluminum on the distal ends of the PMMA fibers. The partial coverage of aluminum on the fibers is randomly, but rather uniformly distributed across the end of the optical fibers. After the aluminum deposition, the ends of the fibers are then exposed to hyperthermal atomic oxygen, which oxidizes the areas that are not protected by aluminum. The resulting PMMA fibers have a greatly increased surface area and the cones or pillars are sufficiently close together that the cellular components in blood are excluded from passing into the valleys between the cones and pillars. The optical fibers are then coated with appropriated surface chemistry so that they can optically sense the glucose level in the blood sample than that with conventional glucose monitoring.
Official Gazette of the U.S. Patent and Trademark Office
Blood; Coatings; Glucose; Optical Fibers; Oxygen Atoms; Protective Coatings

20080025692 NASA, Washington, DC USA
System for the diagnosis and monitoring of coronary artery disease, acute coronary syndromes, cardiomyopathy and other cardiac conditions
Schlegel, Todd T., Inventor; Arenare, Brian, Inventor; June 10, 2008; 32 pp.; In English
Patent Info.: Filed March 26, 2003; US-Patent-7,386,340; US-Patent-Appl-SN-10/402,866; No Copyright; Avail: CASI; A03, Hardcopy
ONLINE: http://hdl.handle.net/2060/20080025692

Cardiac electrical data are received from a patient, manipulated to determine various useful aspects of the ECG signal, and displayed and stored in a useful form using a computer. The computer monitor displays various useful information, and in particular graphically displays various permutations of reduced amplitude zones and kurtosis that increase the rapidity and accuracy of cardiac diagnoses. New criteria for reduced amplitude zones are defined that enhance the sensitivity and specificity for detecting cardiac abnormalities.
Official Gazette of the U.S. Patent and Trademark Office
Coronary Artery Disease; Electrocardiography; Signs and Symptoms

54
MAN/SYSTEM TECHNOLOGY AND LIFE SUPPORT

Includes human factors engineering, bionics, man-machine systems, life support, space suits and protective clothing. For related information see also *16 Space Transportation and Safety* and *52 Aerospace Medicine*.

20080009469 Advanced Fuel Research, Inc., East Hartford, CT USA
Pyrolysis process for producing fuel gas
Serio, Michael A., Inventor; Kroo, Erik, Inventor; Wojtowicz, Marek A., Inventor; Suuberg, Eric M., Inventor; July 10, 2007; 13 pp.; In English
Contract(s)/Grant(s): NAS2-99001; NAS2-00007; Patent Info.: Filed January 10, 2006; US-Patent-7,241,323; US-Patent-Appl-SN-11/328,921; No Copyright; Avail: CASI; A03, Hardcopy
ONLINE: http://hdl.handle.net/2060/20080009469

Solid waste resource recovery in space is effected by pyrolysis processing, to produce light gases as the main products (CH.sub.4, H.sub.2, CO.sub.2, CO, H.sub.2O, NH.sub.3) and a reactive carbon-rich char as the main byproduct. Significant amounts of liquid products are formed under less severe pyrolysis conditions, and are cracked almost completely to gases as the temperature is raised. A primary pyrolysis model for the composite mixture is based on an existing model for whole biomass materials, and an artificial neural network models the changes in gas composition with the severity of pyrolysis conditions.
Official Gazette of the U.S. Patent and Trademark Office
Gas Recovery; Pyrolysis; Solid Wastes; Biomass Energy Production; Neural Nets

20080020318 Boeing Co., Chicago, IL USA
Composite shell spacecraft seat
Barackman, Victor J., Inventor; Pulley, John K., Inventor; Simon, Xavier D., Inventor; McKee, Sandra D., Inventor; February 26, 2008; 7 pp.; In English
Contract(s)/Grant(s): NAS8-01099; Patent Info.: Filed January 6, 2005; US-Patent-7,334,844; US-Patent-Appl-SN-10/905,483; No Copyright; Avail: CASI; A02, Hardcopy
ONLINE: http://hdl.handle.net/2060/20080020318

A two-part seat (10) providing full body support that is specific for each crew member (30) on an individual basis. The two-part construction for the seat (10) can accommodate many sizes and shapes for crewmembers (30) because it is reconfigurable and therefore reusable for subsequent flights. The first component of the two-part seat construction is a composite shell (12) that surrounds the crewmember's entire body and is generically fitted to their general size in height and weight. The second component of the two-part seat (10) is a cushion (20) that conforms exactly to the specific crewmember's entire body and gives total body support in more complex environment.
Official Gazette of the U.S. Patent and Trademark Office
Cushions; Seats; Shells (Structural Forms); Spacecraft Equipment

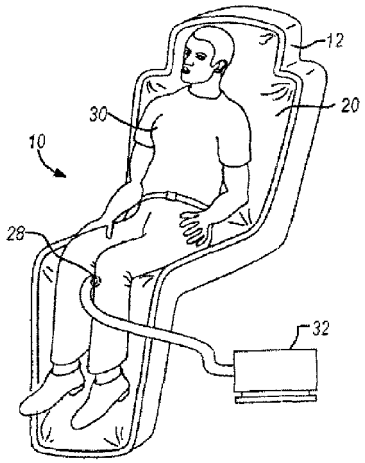

59
MATHEMATICAL AND COMPUTER SCIENCES (GENERAL)

Includes general topics and overviews related to mathematics and computer science. For specific topics in these areas see *categories 60 through 67*.

20080009509 Intellectual Assets. LLC, Lake Tahoe, NV USA
Asset surveillance system: apparatus and method
Bickford, Randall L., Inventor; January 2, 2007; 45 pp.; In English
Contract(s)/Grant(s): NAS8-98027; NAS4-99012; NAS13-01001; Patent Info.: Filed March 5, 2005; US-Patent-7,158,917; US-Patent-Appl-SN-11/073,161; No Copyright; Avail: CASI; A03, Hardcopy
ONLINE: http://hdl.handle.net/2060/20080009509

System and method for providing surveillance of an asset comprised of numerically fitting at least one mathematical model to obtained residual data correlative to asset operation; storing at least one mathematical model in a memory; obtaining a current set of signal data from the asset; retrieving at least one mathematical model from the memory, using the retrieved mathematical model in a sequential hypothesis test for determining if the current set of signal data is indicative of a fault condition; determining an asset fault cause correlative to a determined indication of a fault condition; providing an indication correlative to a determined fault cause, and an action when warranted. The residual data can be mode partitioned, a current mode of operation can be determined from the asset, and at least one mathematical model can be retrieved from the memory as a function of the determined mode of operation.
Official Gazette of the U.S. Patent and Trademark Office
Mathematical Models; Surveillance

20080020436 NASA, Washington, DC USA
ARA type protograph codes
Divsalar, Dariush, Inventor; Abbasfar, Aliazam, Inventor; Jones, Christopher R., Inventor; Dolinar, Samuel J., Inventor; Thorpe, Jeremy C., Inventor; Andrews, Kenneth S., Inventor; Yao, Kung, Inventor; March 11, 2008; 49 pp.; In English
Patent Info.: Filed June 24, 2005; US-Patent-7,343,539; US-Patent-Appl-SN-11/166,040; No Copyright; Avail: CASI; A03, Hardcopy
ONLINE: http://hdl.handle.net/2060/20080020436

An apparatus and method for encoding low-density parity check codes. Together with a repeater, an interleaver and an accumulator, the apparatus comprises a precoder, thus forming accumulate-repeat-accumulate (ARA codes). Protographs

representing various types of ARA codes, including AR3A, AR4A and ARJA codes, are described. High performance is obtained when compared to the performance of current repeat-accumulate (RA) or irregular-repeat-accumulate (IRA) codes.
Official Gazette of the U.S. Patent and Trademark Office
Accumulators; Coding; Repeaters

60
COMPUTER OPERATIONS AND HARDWARE

Includes hardware for computer graphics, firmware and data processing. For components see *33 Electronics and Electrical Engineering*. For computer vision see *63 Cybernetics, Artificial Intelligence and Robotics*.

20080008722 NASA, Washington, DC USA
Nonvolatile analog memory
MacLeod, Todd C., Inventor; August 21, 2007; 5 pp.; In English
Patent Info.: Filed November 29, 2005; US-Patent-7,259,981; US-Patent-Appl-SN-11/296,719; No Copyright; Avail: CASI; A01, Hardcopy
ONLINE: http://hdl.handle.net/2060/20080008722

A nonvolatile analog memory uses pairs of ferroelectric field effect transistors (FFETs). Each pair is defined by a first FFET and a second FFET. When an analog value is to be stored in one of the pairs, the first FFET has a saturation voltage applied thereto, and the second FFET has a storage voltage applied thereto that is indicative of the analog value. The saturation and storage voltages decay over time in accordance with a known decay function that is used to recover the original analog value when the pair of FFETs is read.
Official Gazette of the U.S. Patent and Trademark Office
Analog Computers; Ferroelectricity; Field Effect Transistors; Memory (Computers)

61
COMPUTER PROGRAMMING AND SOFTWARE

Includes software engineering, computer programs, routines, algorithms, and specific applications, e.g., CAD/CAM. For computer software applied to specific applications, see also the associated category.

20080009446 NASA, Washington, DC USA
System and method of designing a load bearing layer of an inflatable vessel
Spexarth, Gary R., Inventor; November 13, 2007; 25 pp.; In English
Patent Info.: Filed June 20, 2005; US-Patent-7,295,884; US-Patent-Appl-SN-11/158,354; No Copyright; Avail: CASI; A03, Hardcopy
ONLINE: http://hdl.handle.net/2060/20080009446

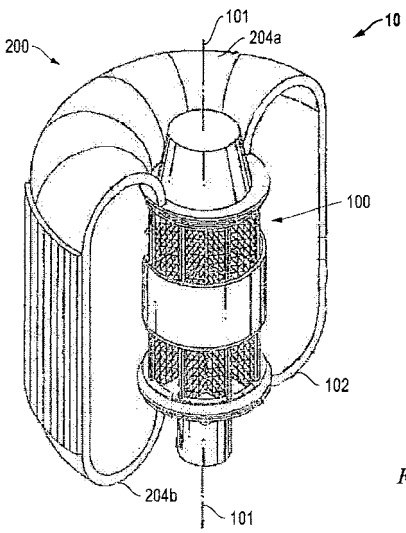

FIG. 1

A computer-implemented method is provided for designing a restraint layer of an inflatable vessel. The restraint layer is inflatable from an initial uninflated configuration to an inflated configuration and is constructed from a plurality of interfacing longitudinal straps and hoop straps. The method involves providing computer processing means (e.g., to receive user inputs, perform calculations, and output results) and utilizing this computer processing means to implement a plurality of subsequent design steps. The computer processing means is utilized to input the load requirements of the inflated restraint layer and to specify an inflated configuration of the restraint layer. This includes specifying a desired design gap between pairs of adjacent longitudinal or hoop straps, whereby the adjacent straps interface with a plurality of transversely extending hoop or longitudinal straps at a plurality of intersections. Furthermore, an initial uninflated configuration of the restraint layer that is inflatable to achieve the specified inflated configuration is determined. This includes calculating a manufacturing gap between pairs of adjacent longitudinal or hoop straps that correspond to the specified desired gap in the inflated configuration of the restraint layer.
Official Gazette of the U.S. Patent and Trademark Office
Load Carrying Capacity; Inflatable Structures; Computer Aided Design

20080009460 Johns Hopkins Univ., Baltimore, MD USA
Data compression using Chebyshev transform
Cheng, Andrew F., Inventor; Hawkins, III, S. Edward, Inventor; Nguyen, Lillian, Inventor; Monaco, Christopher A., Inventor; Seagrave, Gordon G., Inventor; July 24, 2007; 13 pp.; In English
Contract(s)/Grant(s): NAG5-8688; Patent Info.: Filed August 1, 2003; US-Patent-7,249,153; US-Patent-Appl-SN-10/633,447; No Copyright; Avail: CASI; A03, Hardcopy
ONLINE: http://hdl.handle.net/2060/20080009460

The present invention is a method, system, and computer program product for implementation of a capable, general purpose compression algorithm that can be engaged on the fly. This invention has particular practical application with time-series data, and more particularly, time-series data obtained form a spacecraft, or similar situations where cost, size and/or power limitations are prevalent, although it is not limited to such applications. It is also particularly applicable to the compression of serial data streams and works in one, two, or three dimensions. The original input data is approximated by Chebyshev polynomials, achieving very high compression ratios on serial data streams with minimal loss of scientific information.
Official Gazette of the U.S. Patent and Trademark Office
Algorithms; Chebyshev Approximation; Computer Programs; Data Compression

20080009468 California Inst. of Tech., Pasadena, CA USA
Serial turbo trellis coded modulation using a serially concatenated coder
Divsalar, Dariush, Inventor; Dolinar, Sam, Inventor; Pollara, Fabrizio, Inventor; July 10, 2007; 12 pp.; In English
Patent Info.: Filed January 11, 2001; US-Patent-7,243,294; US-Patent-Appl-SN-09/760,514; No Copyright; Avail: CASI; A03, Hardcopy
ONLINE: http://hdl.handle.net/2060/20080009468

A coding system uses a serially concatenated coder driving an interleaver, which drives a trellis coder. This combination, while similar to a turbo coder, produces certain different characteristics.
Official Gazette of the U.S. Patent and Trademark Office
Coders; Coding; Concatenated Codes; Modulation

20080020437 Physical Sciences, Inc., Andover, MA USA
Reconfigurable environmentally adaptive computing
Coxe, Robin L., Inventor; Galica, Gary E., Inventor; March 11, 2008; 16 pp.; In English
Patent Info.: Filed November 30, 2004; US-Patent-7,343,579; US-Patent-Appl-SN-10/999,463; No Copyright; Avail: CASI; A03, Hardcopy
ONLINE: http://hdl.handle.net/2060/20080020437

Described are methods and apparatus, including computer program products, for reconfigurable environmentally adaptive computing technology. An environmental signal representative of an external environmental condition is received. A processing configuration is automatically selected, based on the environmental signal, from a plurality of processing configurations. A reconfigurable processing element is reconfigured to operate according to the selected processing configuration. In some examples, the environmental condition is detected and the environmental signal is generated based on the detected condition.
Official Gazette of the U.S. Patent and Trademark Office
Computation; Computer Programs; Computers; Computer Systems Programs

62
COMPUTER SYSTEMS

Includes computer networks and distributed processing systems. For information systems see *82 Documentation and Information Science*. For computer systems applied to specific applications, see the associated category.

20080009638 Boeing Co., Chicago, IL USA
Network device interface for digitally interfacing data channels to a controller via a network
Ellerbrock, Philip J., Inventor; Grant, Robert L., Inventor; Konz, Daniel W., Inventor; Winkelmann, Joseph P., Inventor; October 2, 2007; 32 pp.; In English
Contract(s)/Grant(s): NCCW-0076; Patent Info.: Filed December 3, 2003; US-Patent-7,277,970; US-Patent-Appl-SN-10/726,918; No Copyright; Avail: CASI; A03, Hardcopy
ONLINE: http://hdl.handle.net/2060/20080009638

The present invention provides a network device interface and method for digitally connecting a plurality of data channels, such as sensors, actuators, and subsystems, to a controller using a network bus. The network device interface interprets commands and data received from the controller and polls the data channels in accordance with these commands. Specifically, the network device interface receives digital commands and data from the controller, and based on these commands and data, communicates with the data channels to either retrieve data in the case of a sensor or send data to activate an actuator. Data retrieved from the sensor is converted into digital signals and transmitted to the controller. In some embodiments, network device interfaces associated with different data channels coordinate communications with the other interfaces based on either a transition in a command message sent by the bus controller or a synchronous clock signal.
Official Gazette of the U.S. Patent and Trademark Office
Computer Networks; Channels (Data Transmission); Data Links; Sensors; Actuators; Controllers

63
CYBERNETICS, ARTIFICIAL INTELLIGENCE AND ROBOTICS

Includes feedback and control theory, information theory, machine learning, and expert systems. For related information see also *54 Man/System Technology and Life Support*.

20080009472 NASA, Washington, DC USA
Hypothesis support mechanism for mid-level visual pattern recognition
Amador, Jose J, Inventor; July 3, 2007; 20 pp.; In English
Patent Info.: Filed December 18, 2003; US-Patent-7,239,751; US-Patent-Appl-SN-10/750,629; No Copyright; Avail: CASI; A03, Hardcopy
ONLINE: http://hdl.handle.net/2060/20080009472

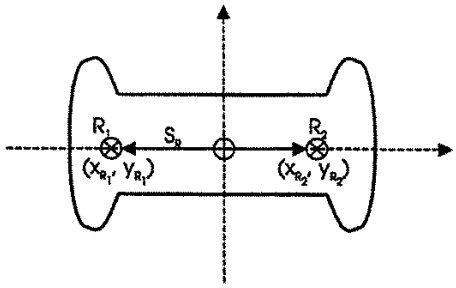

FIGURE 3

A method of mid-level pattern recognition provides for a pose invariant Hough Transform by parametrizing pairs of points in a pattern with respect to at least two reference points, thereby providing a parameter table that is scale- or rotation-invariant. A corresponding inverse transform may be applied to test hypothesized matches in an image and a distance transform utilized to quantify the level of match.
Official Gazette of the U.S. Patent and Trademark Office
Hypotheses; Pattern Recognition; Transformations (Mathematics)

20080009510 NASA, Washington, DC USA
Hybrid neural network and support vector machine method for optimization
Rai, Man Mohan, Inventor; November 6, 2007; 24 pp.; In English
Patent Info.: Filed November 14, 2005; US-Patent-7,293,001; US-Patent-Appl-SN-11/274,744; No Copyright; Avail: CASI; A03, Hardcopy
ONLINE: http://hdl.handle.net/2060/20080009510

System and method for optimization of a design associated with a response function, using a hybrid neural net and support vector machine (NN/SVM) analysis to minimize or maximize an objective function, optionally subject to one or more constraints. As a first example, the NN/SVM analysis is applied iteratively to design of an aerodynamic component, such as an airfoil shape, where the objective function measures deviation from a target pressure distribution on the perimeter of the aerodynamic component. As a second example, the NN/SVM analysis is applied to data classification of a sequence of data points in a multidimensional space. The NN/SVM analysis is also applied to data regression.
Official Gazette of the U.S. Patent and Trademark Office
Neural Nets; Optimization; Vector Analysis

20080009520 Georgia Inst. of Tech., Atlanta, GA USA
Adaptive control system having hedge unit and related apparatus and methods
Johnson, Eric Norman, Inventor; Calise, Anthony J., Inventor; May 15, 2007; 22 pp.; In English
Contract(s)/Grant(s): NAG8-1638; Patent Info.: Filed June 23, 2003; US-Patent-7,218,973; US-Patent-Appl-SN-10/602,458; No Copyright; Avail: CASI; A03, Hardcopy
ONLINE: http://hdl.handle.net/2060/20080009520

The invention includes an adaptive control system used to control a plant. The adaptive control system includes a hedge unit that receives at least one control signal and a plant state signal. The hedge unit generates a hedge signal based on the control signal, the plant state signal, and a hedge model including a first model having one or more characteristics to which

the adaptive control system is not to adapt, and a second model not having the characteristic(s) to which the adaptive control system is not to adapt. The hedge signal is used in the adaptive control system to remove the effect of the characteristic from a signal supplied to an adaptation law unit of the adaptive control system so that the adaptive control system does not adapt to the characteristic in controlling the plant.
Official Gazette of the U.S. Patent and Trademark Office
Adaptive Control; Control Systems Design

20080018969 Vanderbilt Univ., Nashville, TN USA
Architecture for Multiple Interacting Robot Intelligences
Peters, Richard Alan, II, Inventor; February 5, 2008; 12 pp.; In English
Contract(s)/Grant(s): NCC9-30199; Patent Info.: Filed December 31, 2003; US-Patent-7,328,196; US-Patent-Appl-SN-10/749,326; No Copyright; Avail: CASI; A03, Hardcopy
ONLINE: http://hdl.handle.net/2060/20080018969

An architecture for robot intelligence enables a robot to learn new behaviors and create new behavior sequences autonomously and interact with a dynamically changing environment. Sensory information is mapped onto a Sensory Ego-Sphere (SES) that rapidly identifies important changes in the environment and functions much like short term memory. Behaviors are stored in a database associative memory (DBAM) that creates an active map from the robot's current state to a goal state and functions much like long term memory. A dream state converts recent activities stored in the SES and creates or modifies behaviors in the DBAM.
Official Gazette of the U.S. Patent and Trademark Office
Artificial Intelligence; Machine Learning; Robots

66
SYSTEMS ANALYSIS AND OPERATIONS RESEARCH

Includes mathematical modeling of systems; network analysis; mathematical programming; decision theory; and game theory.

20080009461 California Inst. of Tech., Pasadena, CA USA
System for solving diagnosis and hitting set problems
Fijany, Amir, Inventor; Vatan, Farrokh, Inventor; July 24, 2007; 26 pp.; In English
Patent Info.: Filed February 13, 2006; US-Patent-7,249,003; US-Patent-Appl-SN-11/353,673; No Copyright; Avail: CASI; A03, Hardcopy
ONLINE: http://hdl.handle.net/2060/20080009461

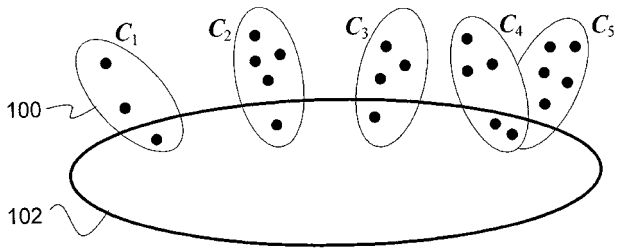

FIG. 1

The diagnosis problem arises when a system's actual behavior contradicts the expected behavior, thereby exhibiting symptoms (a collection of conflict sets). System diagnosis is then the task of identifying faulty components that are responsible for anomalous behavior. To solve the diagnosis problem, the present invention describes a method for finding the minimal set of faulty components (minimal diagnosis set) that explain the conflict sets. The method includes acts of creating a matrix of the collection of conflict sets, and then creating nodes from the matrix such that each node is a node in a search tree. A determination is made as to whether each node is a leaf node or has any children nodes. If any given node has children nodes, then the node is split until all nodes are leaf nodes. Information gathered from the leaf nodes is used to determine the minimal diagnosis set.
Official Gazette of the U.S. Patent and Trademark Office
Diagnosis; Signs and Symptoms; Systems Health Monitoring; Systems Analysis; Problem Solving

20080023612 NASA, Washington, DC USA
Inductive monitoring system constructed from nominal system data and its use in real-time system monitoring
Iverson, David L., Inventor; June 3, 2008; 25 pp.; In English
Patent Info.: Filed February 24, 2004; US-Patent-7,383,238; US-Patent-Appl-SN-10/789,029; No Copyright; Avail: CASI; A03, Hardcopy
ONLINE: http://hdl.handle.net/2060/20080023612

The present invention relates to an Inductive Monitoring System (IMS), its software implementations, hardware

embodiments and applications. Training data is received, typically nominal system data acquired from sensors in normally operating systems or from detailed system simulations. The training data is formed into vectors that are used to generate a knowledge database having clusters of nominal operating regions therein. IMS monitors a system's performance or health by comparing cluster parameters in the knowledge database with incoming sensor data from a monitored-system formed into vectors. Nominal performance is concluded when a monitored-system vector is determined to lie within a nominal operating region cluster or lies sufficiently close to a such a cluster as determined by a threshold value and a distance metric. Some embodiments of IMS include cluster indexing and retrieval methods that increase the execution speed of IMS.
Official Gazette of the U.S. Patent and Trademark Office
Systems Health Monitoring; Data Systems

70
PHYSICS (GENERAL)

Includes general research topics related to mechanics, kinetics, magnetism, and electrodynamics. For specific areas of physics see *categories 71 through 77*. For related instrumentation see *35 Instrumentation and Photography*; for geophysics, astrophysics, or solar physics see *46 Geophysics, 90 Astrophysics*, or *92 Solar Physics*.

20080020440 NASA, Washington, DC USA
Gas volume contents within a container, smart volume instrument
Kelley, Anthony R., Inventor; Van Buskirk, Paul D., Inventor; March 25, 2008; 11 pp.; In English
Patent Info.: Filed August 30, 2005; US-Patent-7,347,089; US-Patent-Appl-SN-11/215,749; No Copyright; Avail: CASI; A03, Hardcopy
ONLINE: http://hdl.handle.net/2060/20080020440

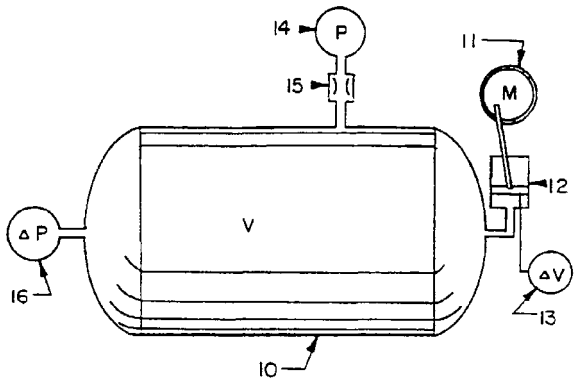

A method for determining the volume of an incompressible gas in a system including incompressible substances in a zero-gravity environment. The method includes inducing a volumetric displacement within a container and measuring the resulting pressure change. From this data, the liquid level can be determined.
Official Gazette of the U.S. Patent and Trademark Office
Displacement; Liquid Levels; Weightlessness

71
ACOUSTICS

Includes sound generation, transmission, and attenuation. For noise pollution see *45 Environment Pollution*. For aircraft noise see also *02 Aerodynamics* and *07 Aircraft Propulsion and Power*.

20080020438 NASA, Washington, DC USA
Auditory alert systems with enhanced detectability
Begault, Durand R., Inventor; March 18, 2008; 12 pp.; In English
Patent Info.: Filed March 28, 2001; US-Patent-7,346,172; US-Patent-Appl-SN-09/822,470; No Copyright; Avail: CASI; A03, Hardcopy
ONLINE: http://hdl.handle.net/2060/20080020438

Methods and systems for distinguishing an auditory alert signal from a background of one or more non-alert signals. In a first embodiment, a prefix signal, associated with an existing alert signal, is provided that has a signal component in each of three or more selected frequency ranges, with each signal component in each of three or more selected level at least 3-10 dB above an estimated background (non-alert) level in that frequency range. The alert signal may be chirped within one or more frequency bands. In another embodiment, an alert signal moves, continuously or discontinuously, from one location to another over a short time interval, introducing a perceived spatial modulation or jitter. In another embodiment, a weighted sum of background signals adjacent to each ear is formed, and the weighted sum is delivered to each ear as a uniform background; a distinguishable alert signal is presented on top of this weighted sum signal at one ear, or distinguishable first and second alert signals are presented at two ears of a subject.
Official Gazette of the U.S. Patent and Trademark Office
Auditory Signals; Warning Systems; Frequency Ranges; Detection

72
ATOMIC AND MOLECULAR PHYSICS

Includes atomic and molecular structure, electron properties, and atomic and molecular spectra. For elementary particle physics see *73 Nuclear Physics*.

20080009523 Systems and Processes Engineering Corp., Austin, TX USA
Signal generation and mixing electronics for frequency-domain lifetime and spectral fluorometry
Cruce, Tommy Clay, Inventor; Hallidy, William H., Inventor; Chin, Robert C., Inventor; April 3, 2007; 18 pp.; In English
Contract(s)/Grant(s): NAS1-20426; NAS1-20162; Patent Info.: Filed November 9, 2001; US-Patent-RE39,537; US-Patent-Appl-SN-10/035,461; No Copyright; Avail: CASI; A03, Hardcopy
ONLINE: http://hdl.handle.net/2060/20080009523

The present invention additionally comprises a method and apparatus for generating and mixing signals for frequency-domain lifetime and spectral fluorometry. The present invention comprises a plurality of signal generators that generate a plurality of signals where the signal generators modulate the amplitude and/or the frequency of the signals. The present invention uses one of these signals to drive an excitation signal that the present invention then directs and transmits at a target mixture, which absorbs the energy from the excitation signal. The property of fluorescence causes the target mixture to emit an emitted signal that the present invention detects with a signal detector. The present invention uses a plurality of mixers to produce a processor reference signal and a data signal. The present invention then uses a processor to compare the processor reference signal with the data signal by analyzing the differences in the phase and the differences in the amplitude between the two signals. The processor then extracts the fluorescence lifetime and fluorescence spectrum of the emitted signal from the phase and amplitude information using a chemometric analysis.
Official Gazette of the U.S. Patent and Trademark Office
Signal Generators; Signal Mixing; Fluorescence; Signal Detectors

74
OPTICS

Includes light phenomena and the theory of optical devices; for specific optical devices see also *35 Instrumentation and Photography*. For lasers see *36 Lasers and Masers*.

20080009432 NASA, Washington, DC USA
Method for texturing surfaces of optical fiber sensors used for blood glucose monitoring
Banks, Bruce A., Inventor; December 11, 2007; 12 pp.; In English
Patent Info.: Filed March 30, 2006; US-Patent-7,308,164; US-Patent-Appl-SN-11/398,734; No Copyright; Avail: CASI; A03, Hardcopy
ONLINE: http://hdl.handle.net/2060/20080009432

Disclosed is a method and the resulting product thereof comprising a solid light-conducting fiber with a point of attachment and having a textured surface site consisting a textured distal end prepared by being placed in a vacuum and then subjected to directed hyperthermal beams comprising oxygen ions or atoms. The textured distal end comprises cones or pillars that are spaced upon from each other by less than 1 micron and are extremely suitable to prevent cellular components of blood from entering the valleys between the cones or pillars so as to effectively separate the cellular components in the blood from interfering with optical sensing of the glucose concentration for diabetic patients.
Official Gazette of the U.S. Patent and Trademark Office
Blood; Glucose; Optical Fibers; Sensors; Diabetes Mellitus

20080009433 Southwest Sciences, Inc., Santa Fe, NM USA
Near re-entrant dense pattern optical multipass cell
Silver, Joel A., Inventor; December 11, 2007; 18 pp.; In English
Patent Info.: Filed September 22, 2004; US-Patent-7,307,716; US-Patent-Appl-SN-10/948,660; No Copyright; Avail: CASI; A03, Hardcopy
ONLINE: http://hdl.handle.net/2060/20080009433

A multiple pass optical cell and method comprising providing a pair of opposed mirrors, one cylindrical and one spherical, introducing light into the cell via an entrance mechanism, and extracting light from the cell via an exit mechanism, wherein the entrance mechanism and exit mechanism are coextensive or non-coextensive.
Official Gazette of the U.S. Patent and Trademark Office
Mirrors; Optical Paths; Spectroscopy

20080009436 NASA, Washington, DC USA

Energetic atomic and ionic oxygen textured optical surfaces for blood glucose monitoring

Banks, Bruce A., Inventor; December 4, 2007; 13 pp.; In English

Patent Info.: Filed July 10, 2006; US-Patent-7,305,154; US-Patent-Appl-SN-11/483,887; No Copyright; Avail: CASI; A03, Hardcopy

ONLINE: http://hdl.handle.net/2060/20080009436

Disclosed is a method and the resulting product thereof comprising a solid light-conducting fiber with a point of attachment and having a textured surface site consisting a textured distal end prepared by being placed in a vacuum and then subjected to directed hyperthermal beams comprising oxygen ions or atoms. The textured distal end comprises cones or pillars that are spaced upon from each other by less than 1 micron and are extremely suitable to prevent cellular components of blood from entering the valleys between the cones or pillars so as to effectively separate the cellular components in the blood from interfering with optical sensing of the glucose concentration for diabetic patients.

Official Gazette of the U.S. Patent and Trademark Office

Blood; Glucose; Oxygen Atoms; Optical Fibers; Diabetes Mellitus; Sensors

20080009442 NP Photonic Technologies, LLC, Tucson, AZ USA

2-.mu.m fiber amplified spontaneous emission (ASE) source

Jiang, Shibin, Inventor; Wu, Jianfeng, Inventor; Geng, Jihong, Inventor; November 20, 2007; 11 pp.; In English

Patent Info.: Filed September 7, 2006; US-Patent-7,298,547; US-Patent-Appl-SN-11/517,164; No Copyright; Avail: CASI; A03, Hardcopy

ONLINE: http://hdl.handle.net/2060/20080009442

A 2-.mu.m fiber Amplified Spontaneous Emission (ASE) source provides a wide emission bandwidth and improved spectral stability/purity for a given output power. The fiber ASE source is formed from a heavy metal oxide multicomponent glass selected from germanate, tellurite and bismuth oxides and doped with high concentrations, 0.5-15 wt. %, thulium oxides (Tm.sub.2O.sub.3) or 0.1-5 wt% holmium oxides (Ho.sub.2O.sub.3) or mixtures thereof. The high concentration of thulium dopants provide highly efficient pump absorption and high quantum efficiency. Co-doping of Tm and Ho can broaden the ASE spectrum.

Official Gazette of the U.S. Patent and Trademark Office

Spontaneous Emission; Optical Fibers; Bandwidth; Stability; Light Sources

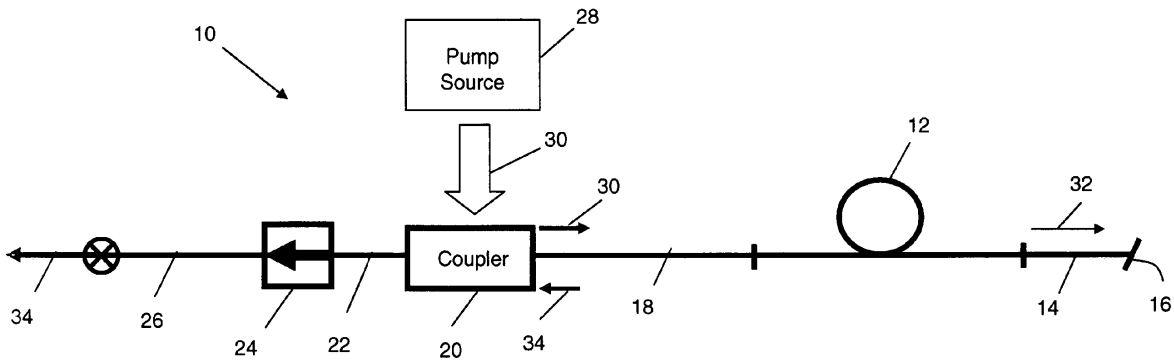

20080009451 NASA, Washington, DC USA

System and method for determining gas optical density changes in a non-linear measurement regime

Sachse, Glen W., Inventor; Rana, Mauro, Inventor; August 7, 2007; 7 pp.; In English

Patent Info.: Filed December 29, 2004; US-Patent-7,253,903; US-Patent-Appl-SN-11/027,930; No Copyright; Avail: CASI; A02, Hardcopy

ONLINE: http://hdl.handle.net/2060/20080009451

Each of two sensors, positioned to simultaneously detect electromagnetic radiation absorption along a path, is calibrated to define a unique response curve associated therewith that relates a change in voltage output for each sensor to a change in optical density. A ratio-of-responses curve is defined by a ratio of the response curve associated with the first sensor to the response curve associated with the second sensor. A ratio of sensor output changes is generated using outputs from the sensors. An operating point on the ratio-of-responses curve is established using the ratio of sensor output changes. The established

operating point is indicative of an optical density. When the operating point is in the non-linear response region of at least one of the sensors, the operating point and optical density corresponding thereto can be used to establish an actual response of at least one of the sensors whereby the actual sensor output can be used in determining changes in the optical density.
Official Gazette of the U.S. Patent and Trademark Office
Absorption Spectra; Electromagnetic Radiation; Gas Density; Nonlinearity; Optical Density; Radiation Absorption

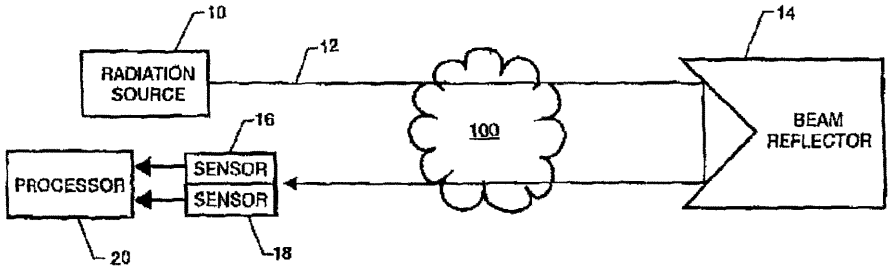

20080009454 NASA, Washington, DC USA
Cathode luminescence light source for broadband applications in the visible spectrum
Foster, John E., Inventor; July 31, 2007; 14 pp.; In English
Patent Info.: Filed December 21, 2004; US-Patent-7,250,723; US-Patent-Appl-SN-11/016,735; No Copyright; Avail: CASI; A03, Hardcopy
ONLINE: http://hdl.handle.net/2060/20080009454

A device and method for generating cathode luminescence is provided. The device and method generate broad spectrum electromagnetic radiation in the visible. A layer of particles, such as quartz or alumina powder, is exposed to electrons in a plasma discharge. Surface excitation of these particles or the generations/excitation of F-center sites give rise to luminescence.
Official Gazette of the U.S. Patent and Trademark Office
Broadband; Cathodes; Light Sources; Luminescence; Visible Spectrum; Electromagnetic Radiation

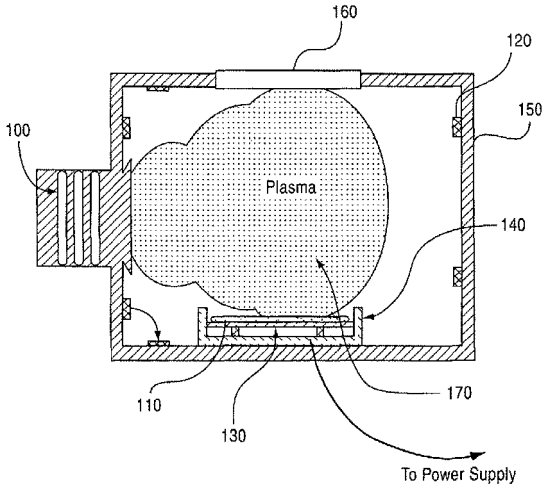

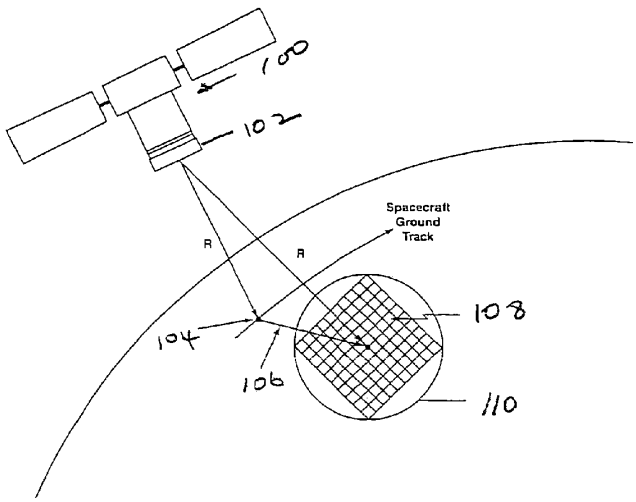

20080009462 NASA, Washington, DC USA
Three-dimension imaging lidar
Degnan, John J., Inventor; July 24, 2007; 14 pp.; In English
Patent Info.: Filed December 5, 2003; US-Patent-7,248,342; US-Patent-Appl-SN-10/730,195; No Copyright; Avail: CASI; A03, Hardcopy
ONLINE: http://hdl.handle.net/2060/20080009462

This invention is directed to a 3-dimensional imaging lidar, which utilizes modest power kHz rate lasers, array detectors, photon-counting multi-channel timing receivers, and dual wedge optical scanners with transmitter point-ahead correction to provide contiguous high spatial resolution mapping of surface features including ground, water, man-made objects, vegetation and submerged surfaces from an aircraft or a spacecraft.
Official Gazette of the U.S. Patent and Trademark Office
Imaging Techniques; Optical Radar; Timing Devices; Three Dimensional Motion

20080009465 Massachusetts Univ., Boston, MA USA

Spectrometer system for optical reflectance measurements

Soller, Babs R., Inventor; Phillipps, Patrick G., Inventor; Parker, Michael S., Inventor; July 17, 2007; 26 pp.; In English

Contract(s)/Grant(s): NCC9-58; Patent Info.: Filed April 25, 2005; US-Patent-7,245,373; US-Patent-Appl-SN-11/113,347; No Copyright; Avail: CASI; A03, Hardcopy

ONLINE: http://hdl.handle.net/2060/20080009465

A spectrometer system includes a thermal light source for illuminating a sample, where the thermal light source includes a filament that emits light when heated. The system additionally includes a spectrograph for measuring a light spectrum from the sample and an electrical circuit for supplying electrical current to the filament to heat the filament and for controlling a resistance of the filament. The electrical circuit includes a power supply that supplies current to the filament, first electrical components that sense a current through the filament, second electrical components that sense a voltage drop across the filament, third electrical components that compare a ratio of the sensed voltage drop and the sensed current with a predetermined value, and fourth electrical components that control the current through the filament or the voltage drop across the filament to cause the ratio to equal substantially the predetermined value.

Official Gazette of the U.S. Patent and Trademark Office

Reflectance; Light Sources; Optical Measurement; Spectrometers; Filaments; Electric Current

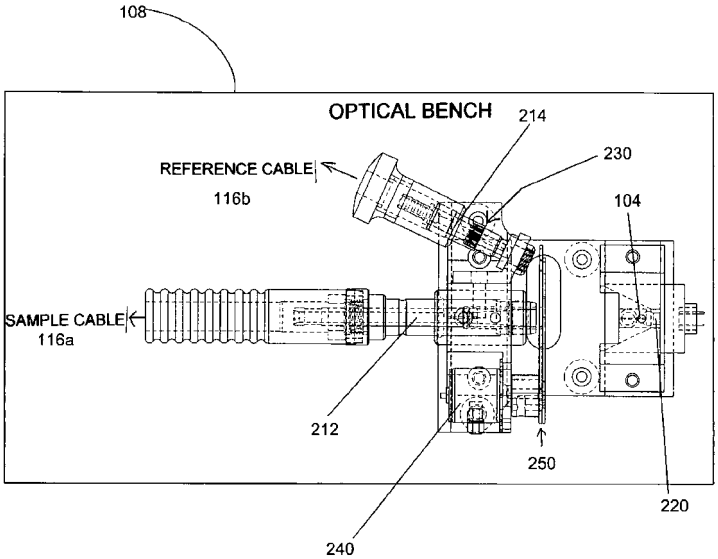

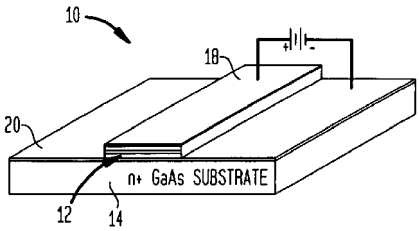

20080009470 Massachusetts Inst. of Tech., Cambridge, MA USA

Terahertz lasers and amplifiers based on resonant optical phonon scattering to achieve population inversion

Hu, Qing, Inventor; Williams, Benjamin S., Inventor; January 2, 2007; 20 pp.; In English

Contract(s)/Grant(s): NAG5-9080; Patent Info.: Filed September 12, 2003; US-Patent-7,158,545; US-Patent-Appl-SN-10/661,831; No Copyright; Avail: CASI; A03, Hardcopy

ONLINE: http://hdl.handle.net/2060/20080009470

The present invention provides quantum cascade lasers and amplifier that operate in a frequency range of about 1 Terahertz to about 10 Terahertz. In one aspect, a quantum cascade laser of the invention includes a semiconductor heterostructure that provides a plurality of lasing modules connected in series. Each lasing module includes a plurality of quantum well structure that collectively generate at least an upper lasing state, a lower lasing state, and a relaxation state such that the upper and the lower lasing states are separated by an energy corresponding to an optical frequency in a range of about 1 to about 10 Terahertz. The lower lasing state is selectively depopulated via resonant LO-phonon scattering of electrons into the relaxation state.

Official Gazette of the U.S. Patent and Trademark Office

Frequency Ranges; Optical Properties; Phonons; Physical Optics; Quantum Cascade Lasers; Lasing

20080009477 California Inst. of Tech., Pasadena, CA USA

Two-photon or higher-order absorbing optical materials for generation of reactive species

Cumpston, Brian, Inventor; Lipson, Matthew, Inventor; Marder, Seth R, Inventor; Perry, Joseph W, Inventor; June 26, 2007; 33 pp.; In English

Patent Info.: Filed May 20, 2003; US-Patent-7,235,194; US-Patent-Appl-SN-10/442,431; No Copyright; Avail: CASI; A03, Hardcopy

ONLINE: http://hdl.handle.net/2060/20080009477

Disclosed are highly efficient multiphoton absorbing compounds and methods of their use. The compounds generally include a bridge of pi-conjugated bonds connecting electron donating groups or electron accepting groups. The bridge may be substituted with a variety of substituents as well. Solubility, lipophilicity, absorption maxima and other characteristics of the compounds may be tailored by changing the electron donating groups or electron accepting groups, the substituents attached to or the length of the pi-conjugated bridge. Numerous photophysical and photochemical methods are enabled by converting these compounds to electronically excited states upon simultaneous absorption of at least two photons of radiation. The compounds have large two-photon or higher-order absorptivities such that upon absorption, one or more Lewis acidic species, Lewis basic species, radical species or ionic species are formed.

Official Gazette of the U.S. Patent and Trademark Office

Absorbents; Absorbers (Materials); Optical Materials; Photons

20080009493 Arizona Univ., Phoenix, AZ USA

Sub-diffraction limit resolution in microscopy

Cheng, Ming, Inventor; Chen, Weinong, Inventor; March 20, 2007; 13 pp.; In English

Contract(s)/Grant(s): NAG8-1469; Patent Info.: Filed December 1, 2004; US-Patent-7,193,774; US-Patent-Appl-SN-11/001,104; No Copyright; Avail: CASI; A03, Hardcopy

ONLINE: http://hdl.handle.net/2060/20080009493

A method and apparatus for visualizing sub-micron size particles employs a polarizing microscope wherein a focused beam of polarized light is projected onto a target, and a portion of the illuminating light is blocked from reaching the specimen, whereby to produce a shadow region, and projecting diffracted light from the target onto the shadow region.

Official Gazette of the U.S. Patent and Trademark Office

Diffraction; Illuminating; Microscopy; Polarized Light

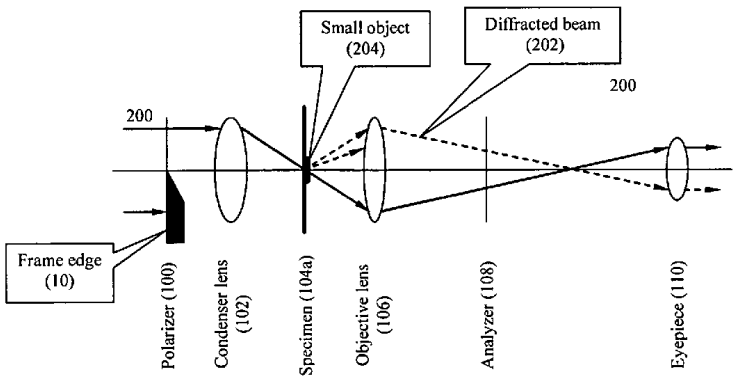

20080009495 California Inst. of Tech., Pasadena, CA USA

Image sensor with high dynamic range linear output

Yadid-Pecht, Orly, Inventor; Fossum, Eric R., Inventor; March 13, 2007; 13 pp.; In English

Patent Info.: Filed September 5, 2000; US-Patent-7,190,398; US-Patent-Appl-SN-09/654,922; No Copyright; Avail: CASI; A03, Hardcopy

ONLINE: http://hdl.handle.net/2060/20080009495

Designs and operational methods to increase the dynamic range of image sensors and APS devices in particular by achieving more than one integration times for each pixel thereof. An APS system with more than one column-parallel signal chains for readout are described for maintaining a high frame rate in readout. Each active pixel is sampled for multiple times during a single frame readout, thus resulting in multiple integration times. The operation methods can also be used to obtain

multiple integration times for each pixel with an APS design having a single column-parallel signal chain for readout. Furthermore, analog-to-digital conversion of high speed and high resolution can be implemented.
Official Gazette of the U.S. Patent and Trademark Office
Dynamic Range; Imaging Techniques; Sensors

20080009504 California Inst. of Tech., Pasadena, CA USA
Opto-electronic feedback for stabilizing oscillators
Maleki, Lutfollah, Inventor; Ilchenko, Vladimir, Inventor; February 6, 2007; 11 pp.; In English
Contract(s)/Grant(s): NAS7-1407; Patent Info.: Filed August 4, 2004; US-Patent-7,173,749; US-Patent-Appl-SN-10/911,401; No Copyright; Avail: CASI; A03, Hardcopy
ONLINE: http://hdl.handle.net/2060/20080009504

This application describes use of an opto-electronic feedback in oscillators to suppress phase noise based on the high Q factor of the opto-electronic feedback.
Official Gazette of the U.S. Patent and Trademark Office
Feedback; Oscillators; Q Factors; Stabilization

20080009517 NASA, Washington, DC USA
Mechanisms and methods for selective wavelength filtering
Tuma, Margaret, Inventor; Brown, Thomas G., Inventor; Gruhlke, Russell, Inventor; March 6, 2007; 9 pp.; In English
Patent Info.: Filed January 28, 2005; US-Patent-7,187,835; US-Patent-Appl-SN-11/044,063; No Copyright; Avail: CASI; A02, Hardcopy
ONLINE: http://hdl.handle.net/2060/20080009517

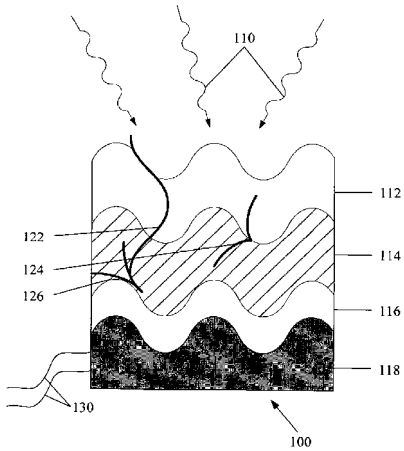

An optical filter includes a dielectric waveguide layer, supporting waveguide modes at specific wavelengths and receiving incident light, a corrugated film layer, composed of one of a metal and a semiconductor and positioned adjacent to a second surface of the waveguide layer and a sensor layer, wherein the sensor layer is capable of absorbing optical energy and generating a corresponding electrical signal. The metal film layer supports a plurality of plasmons, the plurality of plasmons producing a first field and is excited by a transverse mode of the waveguide modes at a wavelength interval. The first field penetrates the sensor layer and the sensor layer generates an electrical signal corresponding to an intensity of received incident light within the wavelength interval.
Official Gazette of the U.S. Patent and Trademark Office
Optical Filters; Semiconductors (Materials); Dielectric Waveguides

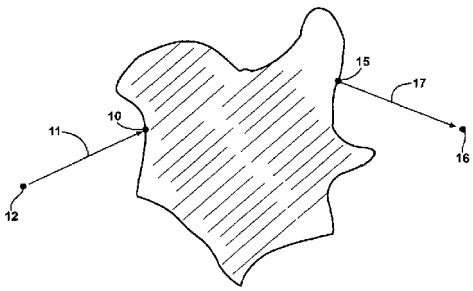

20080009625 University of South Florida, Tampa, FL USA
Method and program product for determining a radiance field in an optical environment
Reinersman, Phillip N., Inventor; Carder, Kendall L., Inventor; October 23, 2007; 22 pp.; In English
Contract(s)/Grant(s): NAS5-31716; Patent Info.: Filed August 25, 2004; US-Patent-7,286,214; US-Patent-Appl-SN-10/925,854; No Copyright; Avail: CASI; A03, Hardcopy
ONLINE: http://hdl.handle.net/2060/20080009625

A hybrid method is presented by which Monte Carlo techniques are combined with iterative relaxation techniques to solve the Radiative Transfer Equation in arbitrary one-, two- or three-dimensional optical environments. The optical environments are first divided into contiguous regions, or elements, with Monte Carlo techniques then being employed to determine the optical response function of each type of element. The elements are combined, and the iterative relaxation techniques are used to determine simultaneously the radiance field on the boundary and throughout the interior of the modeled environment. This hybrid model is capable of providing estimates of the under-water light field needed to expedite inspection of ship hulls and port facilities. It is also capable of providing estimates of the subaerial light field for structured, absorbing or non-absorbing environments such as shadows of mountain ranges within and without absorption spectral bands such as water vapor or CO.sub.2 bands.
Official Gazette of the U.S. Patent and Trademark Office
Monte Carlo Method; Radiance; Radiative Transfer; Optical Measurement; Environments

20080009769 NASA Glenn Research Center, Cleveland, OH, USA

Energetic Atomic and Ionic Oxygen Textured Optical Surfaces for Blood Glucose Monitoring

Banks, Bruce A., Inventor; December 04, 2007; 13 pp.; In English; Original contains black and white illustrations

Patent Info.: Filed 10 Jul. 2006; US-Patent-7,305,154; US-Patent-Appl-SN-11/483887; US-Patent-Appl-SN-10/942637; NASA-Case-LEW-17642-4; No Copyright; Avail: CASI; A03, Hardcopy

ONLINE: http://hdl.handle.net/2060/20080009769

Disclosed is a method and the resulting product thereof comprising a solid light-conducting fiber with a point of attachment and having a textured surface site consisting of a textured distal end prepared by being placed in a vacuum and then subjected to directed hyperthermal beams comprising oxygen ions or atoms. The textured distal end comprises cones or pillars that are spaced upon from each other by less than 1 micron and are extremely suitable to prevent cellular components of blood from entering the valleys between the cones or pillars so as to effectively separate the cellular components in the blood from interfering with optical sensing of the glucose concentration for diabetic patients.

Author

Blood; Glucose; Optical Fibers; Detection; Sensors; Diabetes Mellitus

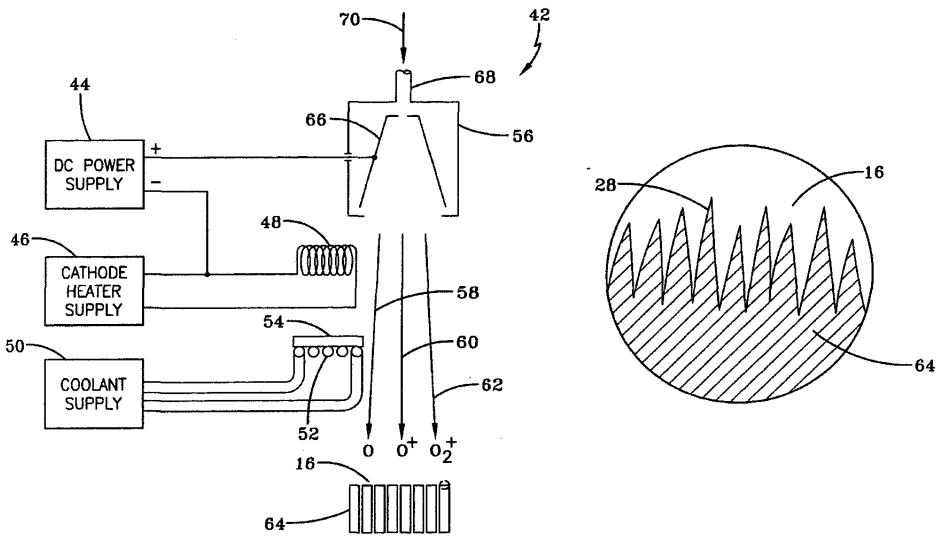

20080020429 ITT Manufacturing Enterprises, Inc., Wilmington, DE USA

Optical nulling apparatus and method for testing an optical surface

Olczak, Eugene, Inventor; Hannon, John J., Inventor; Dey, Thomas W., Inventor; Jensen, Arthur E., Inventor; February 26, 2008; 12 pp.; In English

Contract(s)/Grant(s): NAS5-02200; Patent Info.: Filed November 7, 2005; US-Patent-7,336,370; US-Patent-Appl-SN-11/268,014; No Copyright; Avail: CASI; A03, Hardcopy

ONLINE: http://hdl.handle.net/2060/20080020429

An optical nulling apparatus for testing an optical surface includes an aspheric mirror having a reflecting surface for imaging light near or onto the optical surface under test, where the aspheric mirror is configured to reduce spherical aberration of the optical surface under test. The apparatus includes a light source for emitting light toward the aspheric mirror, the light source longitudinally aligned with the aspheric mirror and the optical surface under test. The aspheric mirror is disposed between the light source and the optical surface under test, and the emitted light is reflected off the reflecting surface of the aspheric mirror and imaged near or onto the optical surface under test. An optical measuring device is disposed between the light source and the aspheric mirror, where light reflected from the optical surface under test enters the optical measuring device. An imaging mirror is disposed longitudinally between the light source and the aspheric mirror, and the imaging mirror is configured to again reflect light, which is first reflected from the reflecting surface of the aspheric mirror, onto the optical surface under test.

Official Gazette of the U.S. Patent and Trademark Office

Optical Equipment; Mirrors; Light Sources; Reflection; Imaging Techniques

20080020431 California Inst. of Tech., Pasadena, CA USA

Wafer bonded epitaxial templates for silicon heterostructures

Atwater, Harry A., Jr., Inventor; Zahler, James M., Inventor; Morral, Anna Fontcubera I, Inventor; March 11, 2008; 20 pp.; In English

Contract(s)/Grant(s): NAS3-02201; Patent Info.: Filed December 7, 2004; US-Patent-7,341,927; US-Patent-Appl-SN-11/004,808; No Copyright; Avail: CASI; A03, Hardcopy

ONLINE: http://hdl.handle.net/2060/20080020431

A heterostructure device layer is epitaxially grown on a virtual substrate, such as an InP/InGaAs/InP double heterostructure. A device substrate and a handle substrate form the virtual substrate. The device substrate is bonded to the handle substrate and is composed of a material suitable for fabrication of optoelectronic devices. The handle substrate is composed of a material suitable for providing mechanical support. The mechanical strength of the device and handle substrates is improved and the device substrate is thinned to leave a single-crystal film on the virtual substrate such as by exfoliation of a device film from the device substrate. An upper portion of the device film exfoliated from the device substrate is removed to provide a smoother and less defect prone surface for an optoelectronic device. A heterostructure is epitaxially grown on the smoothed surface in which an optoelectronic device may be fabricated.

Official Gazette of the U.S. Patent and Trademark Office

Optoelectronic Devices; Indium Gallium Arsenides; Mechanical Devices; Single Crystals; Defects; Fabrication

75
PLASMA PHYSICS

Includes magnetohydrodynamics and plasma fusion. For ionospheric plasmas see *46 Geophysics*. For space plasmas see *90 Astrophysics*.

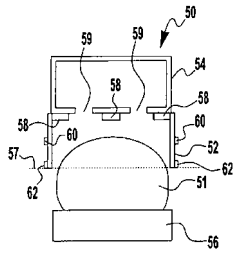

20080009435 NASA, Washington, DC USA

Slotted antenna waveguide plasma source

Foster, John, Inventor; December 11, 2007; 12 pp.; In English

Patent Info.: Filed August 25, 2004; US-Patent-7,305,935; US-Patent-Appl-SN-10/925,499; No Copyright; Avail: CASI; A03, Hardcopy

ONLINE: http://hdl.handle.net/2060/20080009435

A high density plasma generated by microwave injection using a windowless electrodeless rectangular slotted antenna waveguide plasma source has been demonstrated. Plasma probe measurements indicate that the source could be applicable for low power ion thruster applications, ion implantation, and related applications. This slotted antenna plasma source invention operates on the principle of electron cyclotron resonance (ECR). It employs no window and it is completely electrodeless and therefore its operation lifetime is long, being limited only by either the microwave generator itself or charged particle extraction grids if used. The high density plasma source can also be used to extract an electron beam that can be used as a plasma cathode neutralizer for ion source beam neutralization applications.

Official Gazette of the U.S. Patent and Trademark Office

Ion Injection; Microwaves; Plasma Density; Plasmas (Physics); Rectangular Waveguides; Slot Antennas; Waveguides

76
SOLID-STATE PHYSICS

Includes condensed matter physics, crystallography, and superconductivity. For related information see also *33 Electronics and Electrical Engineering*; and *36 Lasers and Masers*.

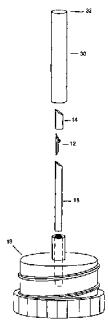

20080008717 Cornell Univ., Ithaca, NY USA

Sample mounts for microcrystal crystallography

Thorne, Robert E., Inventor; Stum, Zachary, Inventor; O'Neill, Kevin, Inventor; Kmetko, Jan, Inventor; August 28, 2007; 11 pp.; In English

Contract(s)/Grant(s): NAG8-1831; Patent Info.: Filed September 19, 2005; US-Patent-7,263,162; US-Patent-Appl-SN-11/228,455; No Copyright; Avail: CASI; A03, Hardcopy

ONLINE: http://hdl.handle.net/2060/20080008717

Sample mounts (10) for mounting microcrystals of biological macromolecules for X-ray crystallography are prepared by using patterned thin polyimide films (12) that have curvature imparted thereto, for example, by being attached to a curved outer surface of a small metal rod (16). The patterned film (12) preferably includes a tapered tip end (24) for holding a crystal. Preferably, a small sample aperture is disposed in the film for reception of the crystal. A

second, larger aperture can also be provided that is connected to the sample aperture by a drainage channel, allowing removal of excess liquid and easier manipulation in viscous solutions. The curvature imparted to the film (12) increases the film's rigidity and allows a convenient scoop-like action for retrieving crystals. The polyimide contributes minimally to background and absorption, and can be treated to obtain desired hydrophobicity or hydrophilicity.
Official Gazette of the U.S. Patent and Trademark Office
Crystallography; Curvature; Macromolecules; Microcrystals; Mounting; Polyimides; Supports; Thin Films; X Rays

20080008718 NASA, Washington, DC USA
System and method for monitoring piezoelectric material performance
Moses, Robert W., Inventor; Fox, Christopher L., Inventor; Fox, Melanie L., Inventor; Chattin, Richard L., Inventor; Shams, Qamar A., Inventor; Fox, Robert L., Inventor; August 28, 2007; 9 pp.; In English
Patent Info.: Filed September 8, 2004; US-Patent-7,262,543; US-Patent-Appl-SN-10/943,655; No Copyright; Avail: CASI; A02, Hardcopy
ONLINE: http://hdl.handle.net/2060/20080008718

A system and method are provided for monitoring performance capacity of a piezoelectric material that may form part of an actuator or sensor device. A switch is used to selectively electrically couple an inductor to the piezoelectric material to form an inductor-capacitor circuit. Resonance is induced in the inductor-capacitor circuit when the switch is operated to create the circuit. The resonance of the inductor-capacitor circuit is monitored with the frequency of the resonance being indicative of performance capacity of the device's piezoelectric material.
Official Gazette of the U.S. Patent and Trademark Office
Actuators; Piezoelectricity; Capacitance Switches

20080008724 Massachusetts Inst. of Tech., Cambridge, MA USA
Methods for synthesis of semiconductor nanocrystals and thermoelectric compositions
Ren, Zhifeng, Inventor; Chen, Gang, Inventor; Poudel, Bed, Inventor; Kumar, Shankar, Inventor; Wang, Wenzhong, Inventor; Dresselhaus, Mildred, Inventor; August 14, 2007; 36 pp.; In English
Contract(s)/Grant(s): NAS3-03108; Patent Info.: Filed May 3, 2005; US-Patent-7,255,846; US-Patent-Appl-SN-11/120,725; No Copyright; Avail: CASI; A03, Hardcopy
ONLINE: http://hdl.handle.net/2060/20080008724

The present invention provides methods for synthesis of IV VI nanostructures, and thermoelectric compositions formed of such structures. In one aspect, the method includes forming a solution of a Group IV reagent, a Group VI reagent and a surfactant. A reducing agent can be added to the solution, and the resultant solution can be maintained at an elevated temperature, e.g., in a range of about 20.degree. C. to about 360.degree. C., for a duration sufficient for generating nanoparticles as binary alloys of the IV VI elements.
Official Gazette of the U.S. Patent and Trademark Office
Nanocrystals; Nanostructures (Devices); Semiconductors (Materials); Thermoelectricity

20080009455 Alabama Univ., Birmingham, AL USA
Use of dye to distinguish salt and protein crystals under microcrystallization conditions
Cosenza, Larry, Inventor; Bray, Terry L., Inventor; DeLucas, Lawrence J., Inventor; Gester, Thomas E., Inventor; Hamrick, David T., Inventor; July 31, 2007; 33 pp.; In English
Contract(s)/Grant(s): NCC8-246; Patent Info.: Filed July 30, 2002; US-Patent-7,250,305; US-Patent-Appl-SN-10/208,576; No Copyright; Avail: CASI; A03, Hardcopy
ONLINE: http://hdl.handle.net/2060/20080009455

An improved method of screening crystal growth conditions is provided wherein molecules are crystallized from solutions containing dyes. These dyes are selectively incorporated or associated with crystals of particular character thereby rendering crystals of particular character colored and improving detection of the dyed crystals. A preferred method involves use of dyes in protein solutions overlayed by oil. Use of oil allows the use of small volumes of solution and facilitates the screening of large numbers of crystallization conditions in arrays using automated devices that dispense appropriate solutions to generate crystallization trials, overlay crystallization trials with an oil, provide appropriate conditions conducive to crystallization and enhance detection of dyed (colored) or undyed (uncolored) crystals that result.
Official Gazette of the U.S. Patent and Trademark Office
Crystal Growth; Crystallization; Crystals; Dyes; Proteins

20080009633 California Inst. of Tech., Pasadena, CA USA
Interband cascade detectors
Chuang, Shun Lien, Inventor; Li, Jian, Inventor; Yang, Rui Q., Inventor; October 16, 2007; 8 pp.; In English
Patent Info.: Filed September 15, 2005; US-Patent-7,282,777; US-Patent-Appl-SN-11/227,989; No Copyright; Avail: CASI; A02, Hardcopy
ONLINE: http://hdl.handle.net/2060/20080009633

A device for detecting radiation, typically in the infrared. Photons are absorbed in an active region of a semiconductor device such that the absorption induces an interband electronic transition and generates photo-excited charge carriers. The charge carriers are coupled into a carrier transport region having multiple quantum wells and characterized by intersubband relaxation that provides rapid charge carrier collection. The photo-excited carriers are collected from the carrier transport region at a conducting contact region. Another carrier transport region characterized by interband tunneling for multiple stages draws charge carriers from another conducting contact and replenishes the charge carriers to the active region for photo-excitation. A photocurrent is generated between the conducting contacts through the active region of the device.
Official Gazette of the U.S. Patent and Trademark Office
Detection; Infrared Radiation; Photons; Semiconductor Devices

20080009744 NASA Ames Research Center, Moffett Field, CA, USA
Functionalization of Carbon Nanotubes
Khare, Bishun N., Inventor; Meyyappan, Meyya, Inventor; October 02, 2007; 8 pp.; In English; Original contains black and white illustrations
Patent Info.: Filed 13 Dec. 2002; US-Patent-7,276,266; US-Patent-Appl-SN-10/320698; NASA-Case-ARC-14661-1; No Copyright; Avail: CASI; A02, Hardcopy
ONLINE: http://hdl.handle.net/2060/20080009744

Method and system for functionalizing a collection of carbon nanotubes (CNTs). A selected precursor gas (e.g., H2, or F2, or CnHm) is irradiated to provide a cold plasma of selected target particles, such as atomic H or F, in a first chamber. The target particles are directed toward an array of CNTs located in a second chamber while suppressing transport of ultraviolet radiation to the second chamber. A CNT array is functionalized with the target particles, at or below room temperature, to a point of saturation, in an exposure time interval no longer than about 30 sec.
Official Gazette of the U.S. Patent and Trademark Office
Carbon Nanotubes; Systems Engineering; Methodology; Hydrogen; Fluorides

77
PHYSICS OF ELEMENTARY PARTICLES AND FIELDS

Includes quantum mechanics; theoretical physics; and statistical mechanics. For related information see also *72 Atomic and Molecular Physics, 73 Nuclear Physics*, and *25 Inorganic, Organic and Physical Chemistry*.

20080009503 Ionfinity, LLC, Pasadena, CA USA
Ion thrusting system
Hartley, Frank T., Inventor; February 13, 2007; 9 pp.; In English
Contract(s)/Grant(s): NAS7-1407; Patent Info.: Filed February 26, 2004; US-Patent-7,174,703; US-Patent-Appl-SN-10/786,230; No Copyright; Avail: CASI; A02, Hardcopy
ONLINE: http://hdl.handle.net/2060/20080009503

An ion thrusting system is disclosed comprising an ionization membrane having at least one area through which a gas is passed, and which ionizes the gas molecules passing therethrough to form ions and electrons, and an accelerator element which accelerates the ions to form thrust. In some variations, a potential is applied to the ionization membrane may be reversed to thrust ions in an opposite direction. The ionization membrane may also include an opening with electrodes that are located closer than a mean free path of the gas being ionized. Methods of manufacture and use are also provided.
Official Gazette of the U.S. Patent and Trademark Office
Gas Ionization; Ions; Electrodes

20080009507 NASA, Washington, DC USA

Solid freeform fabrication apparatus and methods

Taminger, Karen M., Inventor; Watson, J. Kevin, Inventor; Hafley, Robert A., Inventor; Petersen, Daniel D., Inventor; January 30, 2007; 15 pp.; In English

Patent Info.: Filed August 1, 2003; US-Patent-7,168,935; US-Patent-Appl-SN-10/637,086; No Copyright; Avail: CASI; A03, Hardcopy

ONLINE: http://hdl.handle.net/2060/20080009507

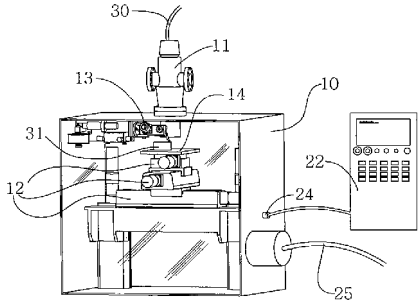

An apparatus for formation of a three dimensional object comprising a sealed container; an electron beam subsystem capable of directing energy within said container; a positioning subsystem contained within said container; a wire feed subsystem contained within said container; an instrumentation subsystem electronically connected to said electron beam subsystem, positioning subsystem, and wire feed subsystem; and a power distribution subsystem electrically connected to said electron beam subsystem, positioning subsystem, wire feed subsystem, and said instrumentation subsystem.

Official Gazette of the U.S. Patent and Trademark Office

Electron Beams; Fabrication; Solids

82
DOCUMENTATION AND INFORMATION SCIENCE

Includes information management; information storage and retrieval technology; technical writing; graphic arts; and micrography. For computer program documentation see *61 Computer Programming and Software*.

20080009447 United Space Alliance, Houston, TX USA

Image and information management system

Robertson, Tina L., Inventor; Raney, Michael C., Inventor; Dougherty, Dennis M., Inventor; Kent, Peter C., Inventor; Brucker, Russell X., Inventor; Lampert, Daryl A., Inventor; November 13, 2007; 23 pp.; In English

Contract(s)/Grant(s): NAS9-20000; Patent Info.: Filed August 23, 2006; US-Patent-7,295,719; US-Patent-Appl-SN-11/466,508; No Copyright; Avail: CASI; A03, Hardcopy

ONLINE: http://hdl.handle.net/2060/20080009447

A system and methods through which pictorial views of an object's configuration, arranged in a hierarchical fashion, are navigated by a person to establish a visual context within the configuration. The visual context is automatically translated by the system into a set of search parameters driving retrieval of structured data and content (images, documents, multimedia, etc.) associated with the specific context. The system places hot spots, or actionable regions, on various portions of the pictorials representing the object. When a user interacts with an actionable region, a more detailed pictorial from the hierarchy is presented representing that portion of the object, along with real-time feedback in the form of a popup pane containing information about that region, and counts-by-type reflecting the number of items that are available within the system associated with the specific context and search filters established at that point in time.

Official Gazette of the U.S. Patent and Trademark Office

Image Classification; Information Management; Information Retrieval

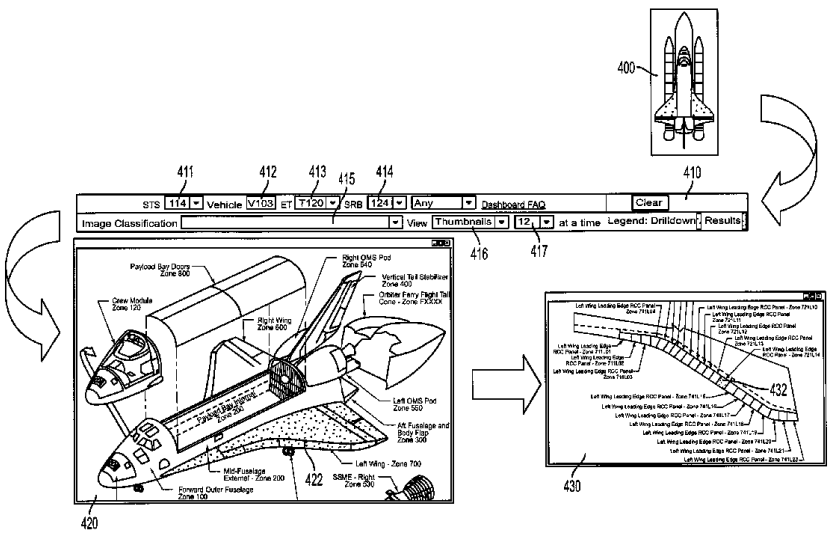

20080009481 Johns Hopkins Univ., Baltimore, MD USA
Definition and maintenance of a telemetry database dictionary
Knopf, William P., Inventor; May 22, 2007; 8 pp.; In English
Contract(s)/Grant(s): NAS5-97179; Patent Info.: Filed August 15, 2003; US-Patent-7,222,115; US-Patent-Appl-SN-10/641,463; No Copyright; Avail: CASI; A02, Hardcopy
ONLINE: http://hdl.handle.net/2060/20080009481

A telemetry dictionary database includes a component for receiving spreadsheet workbooks of telemetry data over a web-based interface from other computer devices. Another component routes the spreadsheet workbooks to a specified directory on the host processing device. A process then checks the received spreadsheet workbooks for errors, and if no errors are detected the spreadsheet workbooks are routed to another directory to await initiation of a remote database loading process. The loading process first converts the spreadsheet workbooks to comma separated value (CSV) files. Next, a network connection with the computer system that hosts the telemetry dictionary database is established and the CSV files are ported to the computer system that hosts the telemetry dictionary database. This is followed by a remote initiation of a database loading program. Upon completion of loading a flatfile generation program is manually initiated to generate a flatfile to be used in a mission operations environment by the core ground system.
Official Gazette of the U.S. Patent and Trademark Office
Data Bases; Dictionaries; Spreadsheets; Telemetry

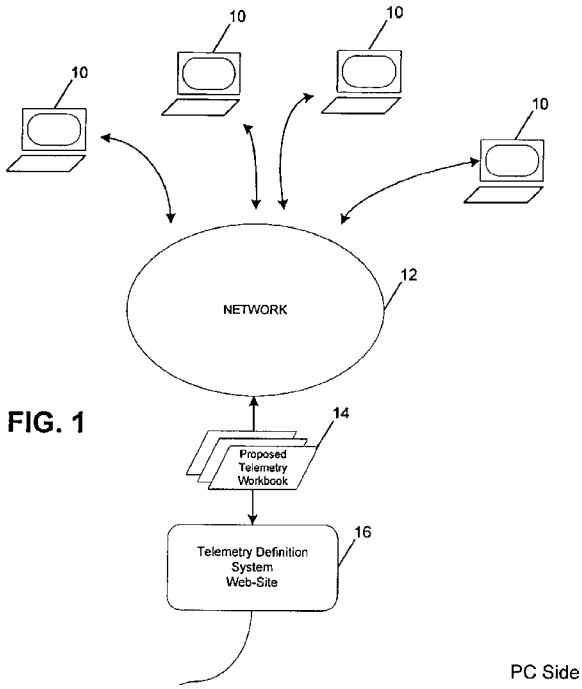

FIG. 1

20080025651 International Business Machines Corp., Armonk, NY USA
Methods and apparatus for extraction and tracking of objects from multi-dimensional sequence data
Hill, Matthew L., Inventor; Chang, Yuan-Chi, Inventor; Li, Chung-Sheng, Inventor; Castelli, Vittorio, Inventor; Bergman, Lawrence David, Inventor; May 13, 2008; 15 pp.; In English
Contract(s)/Grant(s): NCC5-305; Patent Info.: Filed January 12, 2005; US-Patent-7,373,359; US-Patent-Appl-SN-11/034,288; No Copyright; Avail: CASI; A03, Hardcopy
ONLINE: http://hdl.handle.net/2060/20080025651

An object tracking technique is provided which, given: (i) a potentially large data set; (ii) a set of dimensions along which the data has been ordered; and (iii) a set of functions for measuring the similarity between data elements, a set of objects are produced. Each of these objects is defined by a list of data elements. Each of the data elements on this list contains the probability that the data element is part of the object. The method produces these lists via an adaptive, knowledge-based search function which directs the search for high-probability data elements. This serves to reduce the number of data element combinations evaluated while preserving the most flexibility in defining the associations of data elements which comprise an object.
Official Gazette of the U.S. Patent and Trademark Office
Probability Theory; Data Reduction; Analogies; Extraction; Knowledge Based Systems

Subject Term Index

ABLATIVE MATERIALS
Toughened uni-piece, fibrous, reinforced, oxidization-resistant composite – 15

ABRASION RESISTANCE
Self-healing cable apparatus and methods – 11

ABSORBENTS
Two-photon or higher-order absorbing optical materials for generation of reactive species – 74

ABSORBERS (MATERIALS)
Two-photon or higher-order absorbing optical materials for generation of reactive species – 74

ABSORPTION SPECTRA
System and method for determining gas optical density changes in a non-linear measurement regime – 72

ACCUMULATORS
ARA type protograph codes – 65

ACTUATORS
Active multistable twisting device – 56

Actuated atomizer – 43

Detection and enforcement of failure-to-yield in an emergency vehicle preemption system – 23

Distributed solid state programmable thermostat/power controller – 38

Hand held device for wireless powering and interrogation of biomems sensors and actuators – 52

Hybrid eletromechanical actuator and actuation system – 40

Network device interface for digitally interfacing data channels to a controller via a network – 66

System and method for monitoring piezoelectric material performance – 78

ADAPTERS
Connector adapter – 51

ADAPTIVE CONTROL
Adaptive control system having hedge unit and related apparatus and methods – 68

ADAPTIVE OPTICS
Thin, nearly wireless adaptive optical device – 46

AERODYNAMIC DRAG
Dividers for reduction of aerodynamic drag of vehicles with open cavities – 4

AEROGELS
Method for nanoencapsulation of aerogels and nanoencapsulated aerogels produced by such method – 13

AEROSPACE VEHICLES
Integrated inertial stellar attitude sensor – 9

AGRICULTURE
Method and system for spatially variable rate application of agricultural chemicals based on remotely sensed vegetation data – 57

AIR TRAFFIC CONTROL
Delay banking for air traffic management – 3

AIRCRAFT CONTROL
Aircraft control system – 6

Method and apparatus for loss of control inhibitor systems – 4

AIRCRAFT ENGINES
Bootstrap data methodology for sequential hybrid model building – 5

Method and apparatus for in-situ detection and isolation of aircraft engine faults – 56

AIRCRAFT SAFETY
Methods and systems for detection of ice formation on surfaces – 2

AIRCRAFT
Methods and systems for detection of ice formation on surfaces – 2

AIRFOILS
Crescentic ramp turbine stage – 5

Low Density, High Creep Resistant Single Crystal Super Alloy for Turbine Airfoils – 19

Low density, high creep resistant single crystal superalloy for turbine airfoils – 19

ALGAE
Method of producing purified carotenoid compounds – 16

ALGORITHMS
Data compression using Chebyshev transform – 66

Hybrid-dual-fourier tomographic algorithm for a fast three-dimensionial optical image reconstruction in turbid media – 45

ALIGNMENT
Cloverleaf microgyroscope with electrostatic alignment and tuning – 53

Increased alignment in carbon nanotube growth – 34

ALKYLIDENE
EPDM rocket motor insulation – 11

ALLOYS
Cr.sup.4+-doped mixed alloy laser materials and lasers and methods using the materials – 49

ALUMINUM OXIDES
Nanoparticles modified with multiple organic acids – 12

AMBIENT TEMPERATURE
System for controlling child safety seat environment – 43

AMINES
Catalytic dehydrogenation of amine borane complexes – 17

ANALOG COMPUTERS
Nonvolatile analog memory – 65

ANALOGIES
Methods and apparatus for extraction and tracking of objects from multidimensional sequence data – 81

ANTENNA DESIGN
Low power switching for antenna reconfiguration – 28

ANTENNAS
Wireless fluid level measuring system – 44

APERTURES
Dual-polarized feed antenna apparatus and method of use – 28

ARC GENERATORS
Localized arc filament plasma actuators for noise mitigation and mixing enhancement – 43

ARRAYS
Nanoengineered thermal materials based on carbon nanotube array composites – 36

ARTIFICIAL INTELLIGENCE
Architecture for Multiple Interacting Robot Intelligences – 68

Tracking of cells with a compact microscope imaging system with intelligent controls – 46

ATOMIC FORCE MICROSCOPY
Methods and apparatus of spatially resolved electroluminescence of operating organic light-emitting diodes using conductive atomic force microscopy – 37

ATOMIZERS
Actuated atomizer – 44

Atomizer for thermal management system – 54

ATTITUDE (INCLINATION)
Integrated inertial stellar attitude sensor – 9

AUDITORY SIGNALS
Auditory alert systems with enhanced detectability – 69

Reconfigurable Auditory-Visual Display – 28

AUGMENTATION
Generating high precision ionospheric ground-truth measurements – 27

AZO COMPOUNDS
Process for derivatizing carbon nanotubes with diazonium species – 16

BACILLUS
Bacillus odysseyi isolate – 60
Bacillus pumilus SAFR-032 isolate – 59

BACTERIA
Method bacterial endospore quantification using lanthanide dipicolinate luminescence – 59
Template reporter bacteriophage platform and multiple bacterial detection assays based thereon – 59

BACTERIOPHAGES
Template reporter bacteriophage platform and multiple bacterial detection assays based thereon – 59

BANDWIDTH
2-.mu.m fiber amplified spontaneous emission (ASE) source – 71

BEAM STEERING
Holographic memory using beam steering – 45

BIMETALS
Removal of PCB and Other Halogenated Organic Contaminants found in Ex Situ Structures – 17

BIODEGRADABILITY
Removal of PCB and Other Halogenated Organic Contaminants found in Ex Situ Structures – 17

BIOMASS ENERGY PRODUCTION
Pyrolysis process for producing fuel gas – 63

BLOOD
Energetic atomic and ionic oxygen textured optical surfaces for blood glucose monitoring – 71
Energetic Atomic and Ionic Oxygen Textured Optical Surfaces for Blood Glucose Monitoring – 76
Method for texturing surfaces of optical fiber sensors used for blood glucose monitoring – 70
Protective coating and hyperthermal atomic oxygen texturing of optical fibers used for blood glucose monitoring – 62

BOLOMETERS
Pyrolyzed-parylene based sensors and method of manufacture – 16

BONDING
Integral resonator gyroscope – 24
Wafer bonded virtual substrate and method for forming the same – 31

BORANES
Catalytic dehydrogenation of amine borane complexes – 17

BROADBAND
Cathode luminescence light source for broadband applications in the visible spectrum – 72
Wideband radial power combiner/divider fed by a mode transducer – 28

BUS CONDUCTORS
Method and systems for a radiation tolerant bus interface circuit – 26

CABLES
Self-healing cable apparatus and methods – 11

CAMERAS
Integrated inertial stellar attitude sensor – 9
Single substrate camera device with CMOS image sensor – 48
Video sensor with range measurement capability – 47

CAPACITANCE SWITCHES
System and method for monitoring piezoelectric material performance – 78

CAPACITANCE
MEMS micro-translation device with improved linear travel capability – 29

CAPSULES
Method for nanoencapsulation of aerogels and nanoencapsulated aerogels produced by such method – 13
Process for Self-Repair of Insulation Material – 14
Process for self-repair of insulation material – 22

CARBON DIOXIDE
Catalyst for treatment and control of post-combustion emissions – 11

CARBON FIBERS
EPDM rocket motor insulation – 11
Method of making carbon fiber-carbon matrix reinforced ceramic composites – 12

CARBON MONOXIDE
Oxidation-reduction catalyst and its process of use – 18

CARBON NANOTUBES
Carbon Nanotube Reinforced Porous Carbon Having Three-Dimensionally Ordered Porosity and Method of Fabricating Same – 13
Carbon nanotube reinforced porous carbon having three-dimensionally ordered porosity and method of fabricating same – 22
Carbon nanotube-based sensor and method for detection of crack growth in a structure – 35
Functionalization of carbon nanotubes – 35
Functionalization of Carbon Nanotubes – 79
Increased alignment in carbon nanotube growth – 34
Nanoengineered thermal materials based on carbon nanotube array composites – 35
Process for attaching molecular wires and devices to carbon nanotubes and compositions thereof – 41
Process for derivatizing carbon nanotubes with diazonium species – 15
Process for making polymers comprising derivatized carbon nanotubes and compositions thereof – 21
Process for separating metallic from semiconducting single-walled carbon nanotubes – 22
– 13

CARBON
Carbon nanotube reinforced porous carbon having three-dimensionally ordered porosity and method of fabricating same – 22
Flexible carbon-based ohmic contacts for organic transistors – 30
Method of making carbon fiber-carbon matrix reinforced ceramic composites – 12

CAROTENOIDS
Method of producing purified carotenoid compounds – 16

CATALYSTS
Catalyst for treatment and control of post-combustion emissions – 11
Catalytic dehydrogenation of amine borane complexes – 17
Fischer-tropsch catalysts – 18
Stabilized tin-oxide-based oxidation/reduction catalysts – 18

CATHODES
Cathode luminescence light source for broadband applications in the visible spectrum – 72

CAVITIES
Dividers for reduction of aerodynamic drag of vehicles with open cavities – 4
Self-advancing step-tap tool – 54

CELL CULTURING
Bacillus odysseyi isolate – 60

CELLS (BIOLOGY)
Tracking of cells with a compact microscope imaging system with intelligent controls – 47

CENTRIFUGAL COMPRESSORS
Devices and methods of operation thereof for providing stable flow for centrifugal compressors – 24

CENTRIFUGAL FORCE
Water outlet control mechanism for fuel cell system operation in variable gravity environments – 9

CENTRIFUGING
Apparatus and method for centrifugation and robotic manipulation of samples – 61

CERAMIC BONDING
Toughened uni-piece, fibrous, reinforced, oxidization-resistant composite – 14

CERAMIC FIBERS
Ceramic fiber insulation impregnated with an infra-red retardant coating and method for production thereof – 13

CERAMIC MATRIX COMPOSITES
Method of making carbon fiber-carbon matrix reinforced ceramic composites – 12

CERAMICS
Silicon carbide and other films and method of deposition – 21

CHANNELS (DATA TRANSMISSION)
Network device interface for digitally interfacing data channels to a controller via a network – 67

CHEBYSHEV APPROXIMATION
Data compression using Chebyshev transform – 66

CHEMICAL ANALYSIS
Chemical sensor system – 10

CHEMICAL COMPOSITION
Chemical sensor system – 10

Functionalization of carbon nanotubes – 35

CHIPS
Apparatus and methods for packaging integrated circuit chips with antenna modules providing closed electromagnetic environment for integrated antennas – 40

Sensor chip and apparatus for tactile and/or flow sensing – 39

CIRCUITS
Method and systems for a radiation tolerant bus interface circuit – 26

Subranging scheme for SQUID sensors – 38

CLOSED ECOLOGICAL SYSTEMS
Apparatus and methods for packaging integrated circuit chips with antenna modules providing closed electromagnetic environment for integrated antennas – 40

CMOS
Increasing the dynamic range of CMOS photodiode imagers – 32

COATINGS
Corrosion Prevention of Cold Rolled Steel Using Water Dispersible Lignosulfonic Acid Doped Polyaniline – 19

Increased alignment in carbon nanotube growth – 34

Method for nanoencapsulation of aerogels and nanoencapsulated aerogels produced by such method – 13

Method of making carbon fiber-carbon matrix reinforced ceramic composites – 12

Protective coating and hyperthermal atomic oxygen texturing of optical fibers used for blood glucose monitoring – 62

COATING
Ceramic fiber insulation impregnated with an infra-red retardant coating and method for production thereof – 13

Toughened uni-piece, fibrous, reinforced, oxidization-resistant composite – 15

COBALT
Cobalt ferrite based magnetostrictive materials for magnetic stress sensor and actuator applications – 20

CODERS
Serial turbo trellis coded modulation using a serially concatenated coder – 66

CODING
ARA type protograph codes – 65

Serial turbo trellis coded modulation using a serially concatenated coder – 66

COLD ROLLING
Corrosion prevention of cold rolled steel using water dispersible lignosulfonic acid doped polyaniline – 16

Corrosion Prevention of Cold Rolled Steel Using Water Dispersible Lignosulfonic Acid Doped Polyaniline – 19

COLLIMATION
Radiography by selective detection of scatter field velocity components – 45

COLLIMATORS
Method and apparatus for multiple-projection, dual-energy x-ray absorptiometry scanning – 46

COMBUSTION PRODUCTS
Catalyst for treatment and control of post-combustion emissions – 11

COMBUSTION
Stagnation point reverse flow combustor for a combustion system – 43

COMMUNICATION EQUIPMENT
Distributed solid state programmable thermostat/power controller – 38

Method and systems for a radiation tolerant bus interface circuit – 26

Roadside-based communication system and method – 25

Short range RF communication for jet engine control – 6

COMMUNICATION NETWORKS
Short range RF communication for jet engine control – 6

COMPARTMENTS
Method and apparatus to assess compartment syndrome – 62

COMPOSITE MATERIALS
Polybenzoxazole-filled nitrile butadiene rubber compositions – 14

Process for making polymers comprising derivatized carbon nanotubes and compositions thereof – 21

Process for Self-Repair of Insulation Material – 14

– 13

COMPOSITE STRUCTURES
Toughened uni-piece, fibrous, reinforced, oxidization-resistant composite – 14

COMPRESSIBILITY
Method for nanoencapsulation of aerogels and nanoencapsulated aerogels produced by such method – 13

COMPUTATION
Real-time software receiver – 25

Reconfigurable environmentally adaptive computing – 66

COMPUTER AIDED DESIGN
System and method of designing a load bearing layer of an inflatable vessel – 65

COMPUTER NETWORKS
Network device interface for digitally interfacing data channels to a controller via a network – 67

COMPUTER PROGRAMS
Data compression using Chebyshev transform – 66

Reconfigurable environmentally adaptive computing – 66

System and method of analyzing vibrations and identifying failure signatures in the vibrations – 55

COMPUTER SYSTEMS PROGRAMS
Reconfigurable environmentally adaptive computing – 66

COMPUTER VISION
Tracking of cells with a compact microscope imaging system with intelligent controls – 47

COMPUTERS
Reconfigurable environmentally adaptive computing – 66

CONCATENATED CODES
Serial turbo trellis coded modulation using a serially concatenated coder – 66

CONCENTRATION (COMPOSITION)
Method and system for fiber optic determination of gas concentrations in liquid receptacles – 10

CONDUCTIVE HEAT TRANSFER
Nanoengineered thermal materials based on carbon nanotube array composites – 36

CONDUCTORS
Carbon nanotube-based sensor and method for detection of crack growth in a structure – 35

CONNECTORS
Connector adapter – 51

CONTAMINANTS
Removal of PCB and other halogenated organic contaminants found in ex situ structures – 58

CONTROL EQUIPMENT
Ferroelectric Light Control Device – 40

Method and apparatus for loss of control inhibitor systems – 4

CONTROL SYSTEMS DESIGN
Adaptive control system having hedge unit and related apparatus and methods – 68

Aircraft control system – 6

Single substrate camera device with CMOS image sensor – 48

Tracking of Cells with a Compact Microscope Imaging System with Intelligent Controls – 36

CONTROLLERS

Detection and enforcement of failure-to-yield in an emergency vehicle preemption system – 23

Distributed solid state programmable thermostat/power controller – 38

Integrated inertial stellar attitude sensor – 9

Network device interface for digitally interfacing data channels to a controller via a network – 66

Single substrate camera device with CMOS image sensor – 48

Underwater vehicle propulsion and power generation – 55

Water outlet control mechanism for fuel cell system operation in variable gravity environments – 9

CONVERSION

Optimal binarization of gray-scaled digital images via fuzzy reasoning – 44

CORONARY ARTERY DISEASE

System for the diagnosis and monitoring of coronary artery disease, acute coronary syndromes, cardiomyopathy and other cardiac conditions – 63

CORROSION PREVENTION

Corrosion prevention of cold rolled steel using water dispersible lignosulfonic acid doped polyaniline – 16

Corrosion Prevention of Cold Rolled Steel Using Water Dispersible Lignosulfonic Acid Doped Polyaniline – 19

COVERINGS

Self-healing cable apparatus and methods – 11

CRACK PROPAGATION

Carbon nanotube-based sensor and method for detection of crack growth in a structure – 35

CREEP STRENGTH

Low Density, High Creep Resistant Single Crystal Super Alloy for Turbine Airfoils – 19

Low density, high creep resistant single crystal superalloy for turbine airfoils – 19

CROP VIGOR

Method and system for spatially variable rate application of agricultural chemicals based on remotely sensed vegetation data – 57

CRYOGENICS

Charge dissipative dielectric for cryogenic devices – 30

CRYSTAL GROWTH

Crystalline Membranes – 18

Use of dye to distinguish salt and protein crystals under microcrystallization conditions – 78

CRYSTALLIZATION

Struvite crystallization – 60

Use of dye to distinguish salt and protein crystals under microcrystallization conditions – 78

CRYSTALLOGRAPHY

Sample mounts for microcrystal crystallography – 78

CRYSTALS

Use of dye to distinguish salt and protein crystals under microcrystallization conditions – 78

CURVATURE

Sample mounts for microcrystal crystallography – 78

CURVED BEAMS

Elastomeric actuator devices for magnetic resonance imaging – 48

CUSHIONS

Composite shell spacecraft seat – 64

Cushion system for multi-use child safety seat – 24

Cushion System for Multi-Use Child Safety Seat – 53

CYCLES

Low power switching for antenna reconfiguration – 28

DAMPING

System and method of analyzing vibrations and identifying failure signatures in the vibrations – 55

DATA ACQUISITION

Method and apparatus for detecting and determining event characteristics with reduced data collection – 31

DATA BASES

Definition and maintenance of a telemetry database dictionary – 81

DATA COMPRESSION

Data compression using Chebyshev transform – 66

DATA LINKS

Network device interface for digitally interfacing data channels to a controller via a network – 67

System and method for transferring data on a data link – 25

DATA REDUCTION

Methods and apparatus for extraction and tracking of objects from multidimensional sequence data – 81

DATA SYSTEMS

Inductive monitoring system constructed from nominal system data and its use in real-time system monitoring – 69

DATA TRANSMISSION

System and method for transferring data on a data link – 25

DECONTAMINATION

Removal of PCB and Other Halogenated Organic Contaminants found in Ex Situ Structures – 17

Removal of PCB and other halogenated organic contaminants found in ex situ structures – 58

DEFECTS

Wafer bonded epitaxial templates for silicon heterostructures – 77

DEHYDROGENATION

Catalytic dehydrogenation of amine borane complexes – 17

DENSITY (MASS/VOLUME)

Low Density, High Creep Resistant Single Crystal Super Alloy for Turbine Airfoils – 19

DENTAL CALCULI

Computer-implemented system and method for automated and highly accurate plaque analysis, reporting, and visualization – 62

DEOXYRIBONUCLEIC ACID

Bacillus pumilus SAFR-032 isolate – 59

DEPLOYMENT

Method for deploying multiple spacecraft – 7

DEPOSITION

Rapid flow fractionation of particles combining liquid and particulate dielectrophoresis – 36

DEPTH MEASUREMENT

Wireless fluid level measuring system – 44

DETECTION

Auditory alert systems with enhanced detectability – 69

Carbon nanotube-based sensor and method for detection of crack growth in a structure – 35

Chemical sensor system – 10

Energetic Atomic and Ionic Oxygen Textured Optical Surfaces for Blood Glucose Monitoring – 76

Integral resonator gyroscope – 24

Interband cascade detectors – 79

Method bacterial endospore quantification using lanthanide dipicolinate luminescence – 59

Methods and systems for detection of ice formation on surfaces – 2

Sensor chip and apparatus for tactile and/or flow sensing – 39

Subranging scheme for SQUID sensors – 38

DETECTORS

Method and system for sensing and identifying foreign particles in a gaseous environment – 47

DIABETES MELLITUS

Energetic atomic and ionic oxygen textured optical surfaces for blood glucose monitoring – 71

Energetic Atomic and Ionic Oxygen Textured Optical Surfaces for Blood Glucose Monitoring – 76

Method for texturing surfaces of optical fiber sensors used for blood glucose monitoring – 70

DIAGNOSIS
System for solving diagnosis and hitting set problems – 68

DICTIONARIES
Definition and maintenance of a telemetry database dictionary – 81

DIELECTRIC WAVEGUIDES
Mechanisms and methods for selective wavelength filtering – 75

DIELECTRICS
Charge dissipative dielectric for cryogenic devices – 30

Elastomeric actuator devices for magnetic resonance imaging – 48

Method and apparatus for low-loss signal transmission – 27

Rapid flow fractionation of particles combining liquid and particulate dielectrophoresis – 36

DIFFERENTIAL AMPLIFIERS
Cross-differential amplifier – 39

DIFFRACTION
Sub-diffraction limit resolution in microscopy – 74

DIRECT CURRENT
Cross-differential amplifier – 39

DISPLACEMENT
Elastomeric actuator devices for magnetic resonance imaging – 48

Gas volume contents within a container, smart volume instrument – 69

DISPLAY DEVICES
High speed three-dimensional laser scanner with real time processing – 50

Reconfigurable Auditory-Visual Display – 28

DISTORTION
Thin, nearly wireless adaptive optical device – 46

DIVIDERS
Dividers for reduction of aerodynamic drag of vehicles with open cavities – 4

DOPED CRYSTALS
Corrosion prevention of cold rolled steel using water dispersible lignosulfonic acid doped polyaniline – 16

Corrosion Prevention of Cold Rolled Steel Using Water Dispersible Lignosulfonic Acid Doped Polyaniline – 19

DRAG REDUCTION
Dividers for reduction of aerodynamic drag of vehicles with open cavities – 4

DRILL BITS
Self-advancing step-tap tool – 54

DRILLS
Self-advancing step-tap tool – 54

DYES
Use of dye to distinguish salt and protein crystals under microcrystallization conditions – 78

DYNAMIC RANGE
Image sensor with high dynamic range linear output – 75

Increasing the dynamic range of CMOS photodiode imagers – 31

Subranging scheme for SQUID sensors – 38

DYNAMIC STABILITY
Active multistable twisting device – 56

EDGE DETECTION
Image Edge Extraction via Fuzzy Reasoning – 48

EJECTION
Method and associated apparatus for capturing, servicing and de-orbiting earth satellites using robotics – 2

ELECTRIC CONDUCTORS
Wireless fluid level measuring system – 44

ELECTRIC CURRENT
Spectrometer system for optical reflectance measurements – 73

ELECTRIC FIELDS
Rapid flow fractionation of particles combining liquid and particulate dielectrophoresis – 36

ELECTRIC POTENTIAL
Cross-differential amplifier – 39

Distributed solid state programmable thermostat/power controller – 38

Increasing the dynamic range of CMOS photodiode imagers – 31

Low power, high voltage power supply with fast rise/fall time – 33

String resistance detector – 32

ELECTRIC POWER
Wireless Instrumentation System and Power Management Scheme Therefore – 37

ELECTRICAL RESISTIVITY
Silicon carbide and other films and method of deposition – 21

Transdermal delivery of therapeutic agent – 38

ELECTROCARDIOGRAPHY
System for the diagnosis and monitoring of coronary artery disease, acute coronary syndromes, cardiomyopathy and other cardiac conditions – 63

ELECTROCHEMICAL CAPACITORS
Hybrid power management system and method – 30

Hybrid Power Management System and Method – 37

ELECTROCHEMICAL SYNTHESIS
Water free proton conducting membranes based on poly-4-vinylpyridinebisulfate for fuel cells – 57

ELECTROCHEMISTRY
Process for derivatizing carbon nanotubes with diazonium species – 16

ELECTRODES
Electrode design for electrohydrodynamic conduction pumping – 33

Ferroelectric Light Control Device – 40

Ion thrusting system – 79

Localized arc filament plasma actuators for noise mitigation and mixing enhancement – 43

ELECTROHYDRODYNAMICS
Electrode design for electrohydrodynamic conduction pumping – 33

ELECTROLUMINESCENCE
Methods and apparatus of spatially resolved electroluminescence of operating organic light-emitting diodes using conductive atomic force microscopy – 37

ELECTROLYTES
Water free proton conducting membranes based on poly-4-vinylpyridinebisulfate for fuel cells – 57

ELECTROMAGNETIC RADIATION
Cathode luminescence light source for broadband applications in the visible spectrum – 72

Dual-polarized feed antenna apparatus and method of use – 28

Pyrolyzed-parylene based sensors and method of manufacture – 16

System and method for determining gas optical density changes in a non-linear measurement regime – 71

ELECTROMECHANICAL DEVICES
Hybrid eletromechanical actuator and actuation system – 41

ELECTROMECHANICS
Electromechanical acoustic liner – 33

ELECTRON BEAMS
Solid freeform fabrication apparatus and methods – 80

ELECTRONIC PACKAGING
Apparatus and Method for Packaging and Integrating Microphotonic Devices – 42

ELECTROPHORESIS
Rapid flow fractionation of particles combining liquid and particulate dielectrophoresis – 36

ELECTROSTATICS
Chemical sensor system – 10

Cloverleaf microgyroscope with electrostatic alignment and tuning – 52

ELONGATION
MEMS micro-translation device with improved linear travel capability – 29

EMBEDDING
Method of making carbon fiber-carbon matrix reinforced ceramic composites – 12

EMERGENCIES
Detection and enforcement of failure-to-yield in an emergency vehicle preemption system – 23
Roadside-based communication system and method – 25

EMULSIONS
Removal of PCB and Other Halogenated Organic Contaminants found in Ex Situ Structures – 17
Removal of PCB and other halogenated organic contaminants found in ex situ structures – 58

ENAMELS
Computer-implemented system and method for automated and highly accurate plaque analysis, reporting, and visualization – 62

ENCAPSULATING
Transdermal delivery of therapeutic agent – 38

ENERGY GAPS (SOLID STATE)
Method and apparatus for low-loss signal transmission – 27

ENERGY STORAGE
Increasing the dynamic range of CMOS photodiode imagers – 32
Underwater vehicle propulsion and power generation – 55

ENGINE CONTROL
Short range RF communication for jet engine control – 6

ENGINE DESIGN
Method and apparatus for in-situ detection and isolation of aircraft engine faults – 56
Supercharged two-cycle engines employing novel single element reciprocating shuttle inlet valve mechanisms and with a variable compression ratio – 55

ENVIRONMENTAL CLEANUP
Removal of PCB and Other Halogenated Organic Contaminants found in Ex Situ Structures – 17

ENVIRONMENTS
Method and program product for determining a radiance field in an optical environment – 75

EPOXY MATRIX COMPOSITES
Self-healing cable apparatus and methods – 11

ESTIMATING
Method of remotely estimating a rest or best lock frequency of a local station receiver using telemetry – 26

ETCHING
Fabrication of nano-gap electrode arrays by the construction and selective chemical etching of nano-crosswire stacks – 41
Integral resonator gyroscope – 24

EXTRACTION
Methods and apparatus for extraction and tracking of objects from multi-dimensional sequence data – 81

FABRICATION
Carbon Nanotube Reinforced Porous Carbon Having Three-Dimensionally Ordered Porosity and Method of Fabricating Same – 13
Carbon nanotube reinforced porous carbon having three-dimensionally ordered porosity and method of fabricating same – 22
Fabrication of nano-gap electrode arrays by the construction and selective chemical etching of nano-crosswire stacks – 41
Graded junction termination extensions for electronic devices – 32
Increased alignment in carbon nanotube growth – 34
Miniaturized metal (metal alloy)/PdO.sub.x/SiC hydrogen and hydrocarbon gas sensors – 20
Multiple internal seal right micro-electro-mechanical system vacuum package – 34
Pyrolyzed-parylene based sensors and method of manufacture – 16
Solid freeform fabrication apparatus and methods – 80
Wafer bonded epitaxial templates for silicon heterostructures – 77

FAILURE ANALYSIS
Method and apparatus for detecting and determining event characteristics with reduced data collection – 31

FAULT DETECTION
Method and apparatus for in-situ detection and isolation of aircraft engine faults – 56

FEEDBACK
Method and apparatus for loss of control inhibitor systems – 4
Opto-electronic feedback for stabilizing oscillators – 75
Subranging scheme for SQUID sensors – 38

FERRITES
Cobalt ferrite based magnetostrictive materials for magnetic stress sensor and actuator applications – 20

FERROELECTRIC MATERIALS
Ferroelectric Light Control Device – 40

FERROELECTRICITY
Nonvolatile analog memory – 65

FIBER COMPOSITES
Method of making carbon fiber-carbon matrix reinforced ceramic composites – 12

FIBER OPTICS
Method and system for fiber optic determination of gas concentrations in liquid receptacles – 10

FIELD EFFECT TRANSISTORS
Nonvolatile analog memory – 65

FILAMENTS
Spectrometer system for optical reflectance measurements – 73

FISCHER-TROPSCH PROCESS
Fischer-tropsch catalysts – 18

FLAME RETARDANTS
Approach for achieving flame retardancy while retaining physical properties in a compatible polymer matrix – 11

FLAMMABILITY
Approach for achieving flame retardancy while retaining physical properties in a compatible polymer matrix – 11

FLOW DISTRIBUTION
Devices and methods of operation thereof for providing stable flow for centrifugal compressors – 24

FLUID FLOW
Localized arc filament plasma actuators for noise mitigation and mixing enhancement – 43
Microparticle analysis system and method – 15
Shaft seal assembly and method – 51

FLUIDS
Wireless fluid level measuring system – 44

FLUORESCENCE
Signal generation and mixing electronics for frequency-domain lifetime and spectral fluorometry – 70

FLUORIDES
Functionalization of Carbon Nanotubes – 79

FLYWHEELS
Nonsurvivable momentum exchange system – 1

FOAMS
Self-healing cable apparatus and methods – 11

FOURIER TRANSFORMATION
Hybrid-dual-fourier tomographic algorithm for a fast three-dimensional optical image reconstruction in turbid media – 45

FRACTIONATION
Rapid flow fractionation of particles combining liquid and particulate dielectrophoresis – 36

FREQUENCIES
Method of remotely estimating a rest or best lock frequency of a local station receiver using telemetry – 26

FREQUENCY MEASUREMENT
Method of detecting system function by measuring frequency response – 40

FREQUENCY RANGES
Auditory alert systems with enhanced detectability – 69

Terahertz lasers and amplifiers based on resonant optical phonon scattering to achieve population inversion – 73

FREQUENCY RESPONSE
Method of detecting system function by measuring frequency response – 40

FRICTION STIR WELDING
Friction stir weld tools – 53

Friction Stir Weld Tools – 54

FUEL CELLS
Fuel cell with ionization membrane – 23

Water free proton conducting membranes based on poly-4-vinylpyridinebisulfate for fuel cells – 57

Water outlet control mechanism for fuel cell system operation in variable gravity environments – 9

FULLERENES
Endohedral Metallofullerene Derivatives – 20

FUZZY SYSTEMS
Image Edge Extraction via Fuzzy Reasoning – 48

GAS CHROMATOGRAPHY
Thermal modulation for gas chromatography – 35

GAS COMPOSITION
Method and system for fiber optic determination of gas concentrations in liquid receptacles – 10

Method and system for sensing and identifying foreign particles in a gaseous environment – 47

GAS DENSITY
System and method for determining gas optical density changes in a non-linear measurement regime – 72

GAS DETECTORS
Method and system for fiber optic determination of gas concentrations in liquid receptacles – 10

Miniaturized metal (metal alloy)/PdO.sub.x/SiC hydrogen and hydrocarbon gas sensors – 20

Miniaturized Metal (Metal Alloy)/PdO(x)/SiC Hydrogen and Hydrocarbon Gas Sensors – 42

GAS IONIZATION
Fuel cell with ionization membrane – 23

Ion thrusting system – 79

GAS RECOVERY
Pyrolysis process for producing fuel gas – 63

GAS TURBINE ENGINES
Crescentic ramp turbine stage – 5

GERMANIUM ALLOYS
Silicon germanium semiconductive alloy and method of fabricating same – 20

GLOBAL POSITIONING SYSTEM
Real-time software receiver – 25

GLUCOSE
Energetic atomic and ionic oxygen textured optical surfaces for blood glucose monitoring – 71

Energetic Atomic and Ionic Oxygen Textured Optical Surfaces for Blood Glucose Monitoring – 76

Method for texturing surfaces of optical fiber sensors used for blood glucose monitoring – 70

Protective coating and hyperthermal atomic oxygen texturing of optical fibers used for blood glucose monitoring – 62

GRAVITATION
Production of functional proteins: balance of shear stress and gravity – 62

Water outlet control mechanism for fuel cell system operation in variable gravity environments – 9

GRAY SCALE
Optimal binarization of gray-scaled digital images via fuzzy reasoning – 44

GROUND OPERATIONAL SUPPORT SYSTEM
Methods and Systems for Advanced Spaceport Information Management – 8

GROUND TRUTH
Generating high precision ionospheric ground-truth measurements – 27

GUIDE VANES
Low-noise fan exit guide vanes – 6

GUMS (SUBSTANCES)
Computer-implemented system and method for automated and highly accurate plaque analysis, reporting, and visualization – 62

GYROSCOPES
Cloverleaf microgyroscope with electrostatic alignment and tuning – 53

Integral resonator gyroscope – 24

Integrated inertial stellar attitude sensor – 9

HARNESSES
Cushion system for multi-use child safety seat – 24

Cushion System for Multi-Use Child Safety Seat – 53

HEAT RESISTANT ALLOYS
Low density, high creep resistant single crystal superalloy for turbine airfoils – 19

HEAT SHIELDING
Toughened uni-piece, fibrous, reinforced, oxidization-resistant composite – 15

HIGH SPEED
Holographic memory using beam steering – 45

HIGH TEMPERATURE
Method of making carbon fiber-carbon matrix reinforced ceramic composites – 12

HIGH VOLTAGES
Low power, high voltage power supply with fast rise/fall time – 33

HOLOGRAPHY
Holographic memory using beam steering – 45

HOUSINGS
Wireless fluid level measuring system – 44

HYDROCARBONS
Miniaturized Metal (Metal Alloy)/PdO(x)/SiC Hydrogen and Hydrocarbon Gas Sensors – 42

HYDROGEN
Catalytic dehydrogenation of amine borane complexes – 17

Functionalization of Carbon Nanotubes – 79

Miniaturized metal (metal alloy)/PdO.sub.x/SiC hydrogen and hydrocarbon gas sensors – 20

Miniaturized Metal (Metal Alloy)/PdO(x)/SiC Hydrogen and Hydrocarbon Gas Sensors – 42

HYPOTHESES
Hypothesis support mechanism for mid-level visual pattern recognition – 67

ICE FORMATION
Methods and systems for detection of ice formation on surfaces – 2

IDENTIFYING
System and method of analyzing vibrations and identifying failure signatures in the vibrations – 55

ILLUMINATING
Sub-diffraction limit resolution in microscopy – 74

IMAGE ANALYSIS
Computer-implemented system and method for automated and highly accurate plaque analysis, reporting, and visualization – 62

Image Edge Extraction via Fuzzy Reasoning – 48

Optimal binarization of gray-scaled digital images via fuzzy reasoning – 44

IMAGE CLASSIFICATION
Image and information management system – 80

IMAGE PROCESSING
Tracking of Cells with a Compact Microscope Imaging System with Intelligent Controls – 36

Tracking of cells with a compact microscope imaging system with intelligent controls – 46

IMAGE RECONSTRUCTION
Hybrid-dual-fourier tomographic algorithm for a fast three-dimensionial optical image reconstruction in turbid media – 45

IMAGING TECHNIQUES
Elastomeric actuator devices for magnetic resonance imaging – 48

Image sensor with high dynamic range linear output – 74

Increasing the dynamic range of CMOS photodiode imagers – 31

Microparticle analysis system and method – 15

Optical nulling apparatus and method for testing an optical surface – 76

– 72

IMPEDANCE
Method of detecting system function by measuring frequency response – 40

IN SITU MEASUREMENT
Method and apparatus for in-situ detection and isolation of aircraft engine faults – 56

INDIUM GALLIUM ARSENIDES
Wafer bonded epitaxial templates for silicon heterostructures – 77

INFLATABLE STRUCTURES
Cushion system for multi-use child safety seat – 24

System and method of designing a load bearing layer of an inflatable vessel – 65

INFORMATION MANAGEMENT
Image and information management system – 80

Methods and systems for advanced spaceport information management – 8

Methods and Systems for Advanced Spaceport Information Management – 8

INFORMATION RETRIEVAL
Image and information management system – 80

INFRARED RADIATION
Interband cascade detectors – 79

INSTRUMENTS
Wireless Instrumentation System and Power Management Scheme Therefore – 37

INSULATION
Ceramic fiber insulation impregnated with an infra-red retardant coating and method for production thereof – 13

EPDM rocket motor insulation – 10

Polybenzoxazole-filled nitrile butadiene rubber compositions – 14

Process for Self-Repair of Insulation Material – 14

Process for self-repair of insulation material – 22

INSULATORS
Toughened uni-piece, fibrous, reinforced, oxidization-resistant composite – 14

INTEGRATED CIRCUITS
Apparatus and methods for packaging integrated circuit chips with antenna modules providing closed electromagnetic environment for integrated antennas – 40

INTERCEPTION
Dual-polarized feed antenna apparatus and method of use – 28

INTERFACES
Method and systems for a radiation tolerant bus interface circuit – 26

INTERNAL COMBUSTION ENGINES
Supercharged two-cycle engines employing novel single element reciprocating shuttle inlet valve mechanisms and with a variable compression ratio – 55

INTERROGATION
Hand held device for wireless powering and interrogation of biomems sensors and actuators – 52

INTRACRANIAL PRESSURE
Whole-body mathematical model for simulating intracranial pressure dynamics – 60

ION INJECTION
Slotted antenna waveguide plasma source – 77

IONOSPHERES
Generating high precision ionospheric ground-truth measurements – 27

IONS
Ion thrusting system – 79

ISOLATION
Bacillus odysseyi isolate – 60

Bacillus pumilus SAFR-032 isolate – 59

JAMMING
Short range RF communication for jet engine control – 6

JET ENGINES
Short range RF communication for jet engine control – 6

JOSEPHSON JUNCTIONS
Charge dissipative dielectric for cryogenic devices – 30

KINETIC ENERGY
Chemical sensor system – 10

KNOWLEDGE BASED SYSTEMS
Methods and apparatus for extraction and tracking of objects from multidimensional sequence data – 81

LASER APPLICATIONS
High speed three-dimensional laser scanner with real time processing – 50

LASER ARRAYS
Communication using VCSEL laser array – 49

LASER CAVITIES
Communication using VCSEL laser array – 49

LASER MATERIALS
Conversion of type of quantum well structure – 34

Conversion of Type of Quantum Well Structure – 37

Cr.sup.4+-doped mixed alloy laser materials and lasers and methods using the materials – 49

LASERS
High speed three-dimensional laser scanner with real time processing – 50

Video sensor with range measurement capability – 47

LASING
Terahertz lasers and amplifiers based on resonant optical phonon scattering to achieve population inversion – 73

LAUNCHING BASES
Methods and Systems for Advanced Spaceport Information Management – 8

LIGHT EMITTING DIODES
Methods and apparatus of spatially resolved electroluminescence of operating organic light-emitting diodes using conductive atomic force microscopy – 37

LIGHT SOURCES
2-.mu.m fiber amplified spontaneous emission (ASE) source – 71

Cathode luminescence light source for broadband applications in the visible spectrum – 72

Microparticle analysis system and method – 15

Optical nulling apparatus and method for testing an optical surface – 76

Spectrometer system for optical reflectance measurements – 73

LIGNIN
Corrosion Prevention of Cold Rolled Steel Using Water Dispersible Lignosulfonic Acid Doped Polyaniline – 19

LIQUID LEVELS
Gas volume contents within a container, smart volume instrument – 69

LIQUID-VAPOR INTERFACES
Electrode design for electrohydrodynamic conduction pumping – 33

LITHIUM BATTERIES
Method of making fine lithium iron phosphate/carbon-based powders with an olivine type structure – 58

LITHIUM COMPOUNDS
Method of making fine lithium iron phosphate/carbon-based powders with an olivine type structure – 58

LOAD CARRYING CAPACITY
System and method of designing a load bearing layer of an inflatable vessel – 65

LOCKING
Screw-locking wrench – 52

LOW CONDUCTIVITY
Low conductivity and sintering-resistant thermal barrier coatings – 53

LOW CURRENTS
Schottky barrier diode and method thereof – 39

LOW DENSITY MATERIALS
Low Density, High Creep Resistant Single Crystal Super Alloy for Turbine Airfoils – 19

LOW NOISE
Low-noise fan exit guide vanes – 6

LOW VOLTAGE
Low power, high voltage power supply with fast rise/fall time – 33

LUMINESCENCE
Cathode luminescence light source for broadband applications in the visible spectrum – 72

Method bacterial endospore quantification using lanthanide dipicolinate luminescence – 59

MACHINE LEARNING
Architecture for Multiple Interacting Robot Intelligences – 68

MACROMOLECULES
Sample mounts for microcrystal crystallography – 78

MAGNETIC MATERIALS
Cobalt ferrite based magnetostrictive materials for magnetic stress sensor and actuator applications – 20

MAGNETIC RESONANCE
Elastomeric actuator devices for magnetic resonance imaging – 48

MAGNETOSTRICTION
Cobalt ferrite based magnetostrictive materials for magnetic stress sensor and actuator applications – 20

MAMMALS
Apparatus for enhancing tissue repair in mammals – 61

MAN MACHINE SYSTEMS
Method and apparatus for loss of control inhibitor systems – 4

MANAGEMENT SYSTEMS
Atomizer for thermal management system – 54

Hybrid power management system and method – 30

Hybrid Power Management System and Method – 37

MATHEMATICAL MODELS
Asset surveillance system: apparatus and method – 64

Whole-body mathematical model for simulating intracranial pressure dynamics – 60

MATRIX MATERIALS
Process for making polymers comprising derivatized carbon nanotubes and compositions thereof – 22

MECHANICAL DEVICES
Wafer bonded epitaxial templates for silicon heterostructures – 77

MECHANICAL PROPERTIES
Cobalt ferrite based magnetostrictive materials for magnetic stress sensor and actuator applications – 20

MEMBRANE STRUCTURES
Crystalline Membranes – 18

MEMBRANES
Fuel cell with ionization membrane – 23

Water free proton conducting membranes based on poly-4-vinylpyridinebisulfate for fuel cells – 57

MEMORY (COMPUTERS)
Holographic memory using beam steering – 45

Nonvolatile analog memory – 65

METAL NITRIDES
Endohedral Metallofullerene Derivatives – 20

METAL OXIDES
Catalyst for treatment and control of post-combustion emissions – 11

Ceramic fiber insulation impregnated with an infra-red retardant coating and method for production thereof – 12

METALS
Compositions and methods for removal of toxic metals and radionuclides – 58

METHODOLOGY
Functionalization of Carbon Nanotubes – 79

MICROCRYSTALS
Sample mounts for microcrystal crystallography – 78

MICROELECTROMECHANICAL SYSTEMS
MEMS micro-translation device with improved linear travel capability – 29

Multiple internal seal right micro-electromechanical system vacuum package – 34

Silicon carbide and other films and method of deposition – 21

MICROELECTRONICS
Apparatus and Method for Packaging and Integrating Microphotonic Devices – 42

MICROORGANISMS
Apparatus and method for centrifugation and robotic manipulation of samples – 61

MICROPARTICLES
Microparticle analysis system and method – 15

MICROSCOPES
Tracking of Cells with a Compact Microscope Imaging System with Intelligent Controls – 36

MICROSCOPY
Sub-diffraction limit resolution in microscopy – 74

Tracking of Cells with a Compact Microscope Imaging System with Intelligent Controls – 36

Tracking of cells with a compact microscope imaging system with intelligent controls – 46

MICROWAVES
Slotted antenna waveguide plasma source – 77

MINIATURIZATION
Miniaturized metal (metal alloy)/PdO.sub.x/SiC hydrogen and hydrocarbon gas sensors – 21

Miniaturized Metal (Metal Alloy)/PdO(x)/SiC Hydrogen and Hydrocarbon Gas Sensors – 42

MIRRORS
Near re-entrant dense pattern optical multipass cell – 70

Optical nulling apparatus and method for testing an optical surface – 76

Thin, nearly wireless adaptive optical device – 46

MODELS
Bootstrap data methodology for sequential hybrid model building – 5

MODULATION
Serial turbo trellis coded modulation using a serially concatenated coder – 66

Subranging scheme for SQUID sensors – 38

MODULATORS
Thermal modulation for gas chromatography – 35

MODULES
Apparatus and methods for packaging integrated circuit chips with antenna modules providing closed electromagnetic environment for integrated antennas – 40

MOLECULES
Chemical sensor system – 10

MOMENTUM
Nonsurvivable momentum exchange system – 1

MONOMERS
EPDM rocket motor insulation – 11

MONTE CARLO METHOD
Method and program product for determining a radiance field in an optical environment – 75

MOUNTING
Sample mounts for microcrystal crystallography – 78

MUSCLES
Method and apparatus to assess compartment syndrome – 62

NANOCRYSTALS
Method of making fine lithium iron phosphate/carbon-based powders with an olivine type structure – 58

Methods for synthesis of semiconductor nanocrystals and thermoelectric compositions – 78

NANOFABRICATION

Method for nanoencapsulation of aerogels and nanoencapsulated aerogels produced by such method – 13

Nanoengineered thermal materials based on carbon nanotube array composites – 35

NANOPARTICLES

Nanoparticles modified with multiple organic acids – 12

NANOSTRUCTURE GROWTH

Increased alignment in carbon nanotube growth – 34

NANOSTRUCTURES (DEVICES)

Methods for synthesis of semiconductor nanocrystals and thermoelectric compositions – 78

NANOTECHNOLOGY

Functionalization of carbon nanotubes – 35

– 13

NANOTUBES

Process for attaching molecular wires and devices to carbon nanotubes and compositions thereof – 41

NANOWIRES

Fabrication of nano-gap electrode arrays by the construction and selective chemical etching of nano-crosswire stacks – 41

NEGATIVE IONS

Chemical sensor system – 10

NEURAL NETS

Hybrid neural network and support vector machine method for optimization – 67

Pyrolysis process for producing fuel gas – 63

NICKEL ALLOYS

Low Density, High Creep Resistant Single Crystal Super Alloy for Turbine Airfoils – 19

NITROGEN OXIDES

Catalyst for treatment and control of post-combustion emissions – 11

NOBLE METALS

Catalyst for treatment and control of post-combustion emissions – 11

NOISE REDUCTION

Communication system with adaptive noise suppression – 26

Localized arc filament plasma actuators for noise mitigation and mixing enhancement – 43

Low-noise fan exit guide vanes – 5

System and method for improved rotor tip performance – 3

NONLINEARITY

System and method for determining gas optical density changes in a non-linear measurement regime – 72

OPTICAL COUPLING

Apparatus and Method for Packaging and Integrating Microphotonic Devices – 42

OPTICAL DENSITY

System and method for determining gas optical density changes in a non-linear measurement regime – 72

OPTICAL EQUIPMENT

Optical nulling apparatus and method for testing an optical surface – 76

Thin, nearly wireless adaptive optical device – 46

OPTICAL FIBERS

2-.mu.m fiber amplified spontaneous emission (ASE) source – 71

Energetic atomic and ionic oxygen textured optical surfaces for blood glucose monitoring – 71

Energetic Atomic and Ionic Oxygen Textured Optical Surfaces for Blood Glucose Monitoring – 76

Method for texturing surfaces of optical fiber sensors used for blood glucose monitoring – 70

Protective coating and hyperthermal atomic oxygen texturing of optical fibers used for blood glucose monitoring – 62

OPTICAL FILTERS

Mechanisms and methods for selective wavelength filtering – 75

OPTICAL MATERIALS

Thin, nearly wireless adaptive optical device – 46

Two-photon or higher-order absorbing optical materials for generation of reactive species – 74

OPTICAL MEASUREMENT

Method and program product for determining a radiance field in an optical environment – 75

Spectrometer system for optical reflectance measurements – 73

OPTICAL MEASURING INSTRUMENTS

Method and system for sensing and identifying foreign particles in a gaseous environment – 47

OPTICAL PATHS

Near re-entrant dense pattern optical multipass cell – 70

OPTICAL PROPERTIES

Terahertz lasers and amplifiers based on resonant optical phonon scattering to achieve population inversion – 73

OPTICAL RADAR

– 72

OPTICAL RESONANCE

Microparticle analysis system and method – 15

OPTICAL SCANNERS

High speed three-dimensional laser scanner with real time processing – 50

OPTICAL SWITCHING

Low power switching for antenna reconfiguration – 28

OPTICAL TRACKING

Tracking of cells with a compact microscope imaging system with intelligent controls – 47

OPTIMIZATION

Hybrid neural network and support vector machine method for optimization – 67

OPTOELECTRONIC DEVICES

Apparatus and Method for Packaging and Integrating Microphotonic Devices – 42

Wafer bonded epitaxial templates for silicon heterostructures – 77

Wafer bonded virtual substrate and method for forming the same – 31

ORBITAL MECHANICS

Method for deploying multiple spacecraft – 7

ORBITS

Method and associated apparatus for capturing, servicing, and de-orbiting earth satellites using robotics – 7

OSCILLATORS

Opto-electronic feedback for stabilizing oscillators – 75

OXIDATION RESISTANCE

Toughened uni-piece, fibrous, reinforced, oxidization-resistant composite – 15

OXIDATION-REDUCTION REACTIONS

Stabilized tin-oxide-based oxidation/reduction catalysts – 19

OXIDATION

Catalyst for treatment and control of post-combustion emissions – 11

Oxidation-reduction catalyst and its process of use – 18

OXIDES

Miniaturized metal (metal alloy)/PdO.sub.x/SiC hydrogen and hydrocarbon gas sensors – 21

OXIDIZERS

Water outlet control mechanism for fuel cell system operation in variable gravity environments – 9

OXYGEN ATOMS

Energetic atomic and ionic oxygen textured optical surfaces for blood glucose monitoring – 71

Protective coating and hyperthermal atomic oxygen texturing of optical fibers used for blood glucose monitoring – 62

PACKETS (COMMUNICATION)

System and method for transferring data on a data link – 25

PALLADIUM

Miniaturized metal (metal alloy)/PdO.sub.x/SiC hydrogen and hydrocarbon gas sensors – 21

PARTICULATES
Rapid flow fractionation of particles combining liquid and particulate dielectrophoresis – 36

PATTERN RECOGNITION
Hypothesis support mechanism for mid-level visual pattern recognition – 67

PAYLOADS
Methods and systems for advanced spaceport information management – 8

PERFORMANCE PREDICTION
Bootstrap data methodology for sequential hybrid model building – 5

PERIODIC VARIATIONS
Low power switching for antenna reconfiguration – 28

PHASE LOCKED SYSTEMS
Method and apparatus to assess compartment syndrome – 62

PHASE SEPARATION (MATERIALS)
Process for separating metallic from semiconducting single-walled carbon nanotubes – 23

PHONONS
Terahertz lasers and amplifiers based on resonant optical phonon scattering to achieve population inversion – 73

PHOSPHORUS
Struvite crystallization – 60

PHOTODIODES
Increasing the dynamic range of CMOS photodiode imagers – 32

PHOTONICS
Apparatus and Method for Packaging and Integrating Microphotonic Devices – 42

PHOTONS
Interband cascade detectors – 79

Two-photon or higher-order absorbing optical materials for generation of reactive species – 74

PHOTOVOLTAIC CELLS
Hybrid power management system and method – 30

Hybrid Power Management System and Method – 37

PHYSICAL OPTICS
Terahertz lasers and amplifiers based on resonant optical phonon scattering to achieve population inversion – 73

PIEZOELECTRICITY
System and method for monitoring piezoelectric material performance – 78

PINS
Friction stir weld tools – 53

PIXELS
Optimal binarization of gray-scaled digital images via fuzzy reasoning – 44

PLASMA DENSITY
Slotted antenna waveguide plasma source – 77

PLASMAS (PHYSICS)
Localized arc filament plasma actuators for noise mitigation and mixing enhancement – 43

Slotted antenna waveguide plasma source – 77

P-N JUNCTIONS
Graded junction termination extensions for electronic devices – 32

POLARIZED LIGHT
Sub-diffraction limit resolution in microscopy – 74

POLYCHLORINATED BIPHENYLS
Removal of PCB and Other Halogenated Organic Contaminants found in Ex Situ Structures – 17

Removal of PCB and other halogenated organic contaminants found in ex situ structures – 58

POLYIMIDES
Sample mounts for microcrystal crystallography – 78

POLYMER BLENDS
Approach for achieving flame retardancy while retaining physical properties in a compatible polymer matrix – 11

POLYMER MATRIX COMPOSITES
Flexible carbon-based ohmic contacts for organic transistors – 30

Process for making polymers comprising derivatized carbon nanotubes and compositions thereof – 21

POLYMERS
Method for nanoencapsulation of aerogels and nanoencapsulated aerogels produced by such method – 13

POROSITY
Carbon Nanotube Reinforced Porous Carbon Having Three-Dimensionally Ordered Porosity and Method of Fabricating Same – 13

Carbon nanotube reinforced porous carbon having three-dimensionally ordered porosity and method of fabricating same – 22

POWDER (PARTICLES)
Method of making fine lithium iron phosphate/carbon-based powders with an olivine type structure – 58

POWER
Hybrid Power Management System and Method – 37

PRESSURE MEASUREMENT
Method and apparatus to assess compartment syndrome – 62

PROBABILITY THEORY
Methods and apparatus for extraction and tracking of objects from multidimensional sequence data – 81

PROBLEM SOLVING
System for solving diagnosis and hitting set problems – 68

PROGRAMMABLE LOGIC DEVICES
Method and apparatus for detecting and determining event characteristics with reduced data collection – 31

PROPELLERS
Underwater vehicle propulsion and power generation – 55

PROTECTIVE COATINGS
Protective coating and hyperthermal atomic oxygen texturing of optical fibers used for blood glucose monitoring – 63

PROTEIN SYNTHESIS
Production of functional proteins: balance of shear stress and gravity – 62

PROTEINS
Use of dye to distinguish salt and protein crystals under microcrystallization conditions – 78

PROTONS
Water free proton conducting membranes based on poly-4-vinylpyridinebisulfate for fuel cells – 57

PULSE GENERATORS
Hybrid power management system and method – 30

Hybrid Power Management System and Method – 37

Transdermal delivery of therapeutic agent – 38

PYROLYSIS
Pyrolysis process for producing fuel gas – 63

Pyrolysis processing for solid waste resource recovery – 16

Pyrolyzed-parylene based sensors and method of manufacture – 16

Q FACTORS
Opto-electronic feedback for stabilizing oscillators – 75

QUANTUM CASCADE LASERS
Terahertz lasers and amplifiers based on resonant optical phonon scattering to achieve population inversion – 73

QUANTUM WELLS
Conversion of type of quantum well structure – 34

Conversion of Type of Quantum Well Structure – 37

RADIANCE
Method and program product for determining a radiance field in an optical environment – 75

RADIATION ABSORPTION
System and method for determining gas optical density changes in a non-linear measurement regime – 72

RADIATION DETECTORS
Radiography by selective detection of scatter field velocity components – 45

RADIATIVE TRANSFER
Method and program product for determining a radiance field in an optical environment – 75

RADIO COMMUNICATION
Short range RF communication for jet engine control – 6

RADIO FREQUENCIES
Method and apparatus for low-loss signal transmission – 27

Short range RF communication for jet engine control – 6

RADIO RECEIVERS
Real-time software receiver – 25

RADIOACTIVE ISOTOPES
Compositions and methods for removal of toxic metals and radionuclides – 58

RADIOGRAPHY
Radiography by selective detection of scatter field velocity components – 45

RAMPS
Crescentic ramp turbine stage – 5

RANGE FINDERS
Video sensor with range measurement capability – 47

RARE EARTH ELEMENTS
Method bacterial endospore quantification using lanthanide dipicolinate luminescence – 59

REAL TIME OPERATION
High speed three-dimensional laser scanner with real time processing – 50

Method of detecting system function by measuring frequency response – 39

Real-time software receiver – 25

Thin, nearly wireless adaptive optical device – 46

RECEIVERS
Method and apparatus for low-loss signal transmission – 27

Method of remotely estimating a rest or best lock frequency of a local station receiver using telemetry – 26

RECIPROCATION
Supercharged two-cycle engines employing novel single element reciprocating shuttle inlet valve mechanisms and with a variable compression ratio – 55

RECTANGULAR WAVEGUIDES
Slotted antenna waveguide plasma source – 77

REENTRY SHIELDING
Toughened uni-piece, fibrous, reinforced, oxidization-resistant composite – 15

REFLECTANCE
Spectrometer system for optical reflectance measurements – 73

REFLECTION
Optical nulling apparatus and method for testing an optical surface – 76

REINFORCING MATERIALS
Carbon Nanotube Reinforced Porous Carbon Having Three-Dimensionally Ordered Porosity and Method of Fabricating Same – 13

REMOTE SENSING
Method and system for spatially variable rate application of agricultural chemicals based on remotely sensed vegetation data – 57

REMOVAL
Compositions and methods for removal of toxic metals and radionuclides – 58

REPEATERS
ARA type protograph codes – 65

RESIDUAL STRESS
Silicon carbide and other films and method of deposition – 21

RESONATORS
Electromechanical acoustic liner – 33

Integral resonator gyroscope – 24

ROADS
Roadside-based communication system and method – 25

ROBOTICS
Apparatus and method for centrifugation and robotic manipulation of samples – 61

Method and associated apparatus for capturing, servicing and de-orbiting earth satellites using robotics – 1

Method and associated apparatus for capturing, servicing, and de-orbiting earth satellites using robotics – 7

ROBOTS
Architecture for Multiple Interacting Robot Intelligences – 68

ROCKET ENGINES
EPDM rocket motor insulation – 11

ROLLER BEARINGS
Thrust rollers – 50

ROLLERS
Thrust rollers – 50

ROTARY WING AIRCRAFT
System and method for improved rotor tip performance – 3

ROTORS
System and method for improved rotor tip performance – 3

RUPTURING
Process for self-repair of insulation material – 22

RUTHENIUM
Oxidation-reduction catalyst and its process of use – 18

SAFETY DEVICES
Cushion System for Multi-Use Child Safety Seat – 53

SAFETY FACTORS
System for controlling child safety seat environment – 43

SAFETY
Cushion system for multi-use child safety seat – 24

System for controlling child safety seat environment – 43

SAILS
System and method for improved rotor tip performance – 3

SATELLITES
Method and associated apparatus for capturing, servicing and de-orbiting earth satellites using robotics – 2

Method and associated apparatus for capturing, servicing, and de-orbiting earth satellites using robotics – 7

SCANNERS
Method and apparatus for multiple-projection, dual-energy x-ray absorptiometry scanning – 46

SCHOTTKY DIODES
Miniaturized Metal (Metal Alloy)/PdO(x)/SiC Hydrogen and Hydrocarbon Gas Sensors – 42

Schottky barrier diode and method thereof – 39

SCREWS
Screw-locking wrench – 52

SEALS (STOPPERS)
Multiple internal seal right micro-electromechanical system vacuum package – 34

Shaft seal assembly and method – 51

SEATS
Composite shell spacecraft seat – 64

Cushion system for multi-use child safety seat – 24

Cushion System for Multi-Use Child Safety Seat – 53

SELF REPAIRING DEVICES
Process for Self-Repair of Insulation Material – 14

SEMICONDUCTOR DEVICES
Graded junction termination extensions for electronic devices – 32

Interband cascade detectors – 79

SEMICONDUCTOR DIODES
Graded junction termination extensions for electronic devices – 32

Holographic memory using beam steering – 45

SEMICONDUCTORS (MATERIALS)
Conversion of type of quantum well structure – 34

Conversion of Type of Quantum Well Structure – 37

Mechanisms and methods for selective wavelength filtering – 75

Methods for synthesis of semiconductor nanocrystals and thermoelectric compositions – 78

Process for separating metallic from semiconducting single-walled carbon nanotubes – 22

SENSORS
Carbon nanotube-based sensor and method for detection of crack growth in a structure – 35

Energetic atomic and ionic oxygen textured optical surfaces for blood glucose monitoring – 71

Energetic Atomic and Ionic Oxygen Textured Optical Surfaces for Blood Glucose Monitoring – 76

Image sensor with high dynamic range linear output – 74

Method and apparatus for loss of control inhibitor systems – 4

Method for texturing surfaces of optical fiber sensors used for blood glucose monitoring – 70

Miniaturized Metal (Metal Alloy)/PdO(x)/SiC Hydrogen and Hydrocarbon Gas Sensors – 42

Network device interface for digitally interfacing data channels to a controller via a network – 66

Sensor chip and apparatus for tactile and/or flow sensing – 39

Wireless Instrumentation System and Power Management Scheme Therefore – 36

SEPARATORS
Water outlet control mechanism for fuel cell system operation in variable gravity environments – 9

SHAFTS (MACHINE ELEMENTS)
Shaft seal assembly and method – 51

Underwater vehicle propulsion and power generation – 55

SHAPES
Active multistable twisting device – 56

SHEAR STRESS
Production of functional proteins: balance of shear stress and gravity – 62

SHELLS (STRUCTURAL FORMS)
Composite shell spacecraft seat – 64

SIGNAL DETECTION
Reconfigurable Auditory-Visual Display – 29

SIGNAL DETECTORS
Signal generation and mixing electronics for frequency-domain lifetime and spectral fluorometry – 70

SIGNAL GENERATORS
Signal generation and mixing electronics for frequency-domain lifetime and spectral fluorometry – 70

SIGNAL MIXING
Signal generation and mixing electronics for frequency-domain lifetime and spectral fluorometry – 70

SIGNAL PROCESSING
Communication system with adaptive noise suppression – 26

SIGNAL TO NOISE RATIOS
Communication system with adaptive noise suppression – 26

SIGNAL TRANSMISSION
Method and apparatus for low-loss signal transmission – 27

SIGNATURES
System and method of analyzing vibrations and identifying failure signatures in the vibrations – 55

SIGNS AND SYMPTOMS
System for solving diagnosis and hitting set problems – 68

System for the diagnosis and monitoring of coronary artery disease, acute coronary syndromes, cardiomyopathy and other cardiac conditions – 63

SILICON ALLOYS
Silicon germanium semiconductive alloy and method of fabricating same – 20

SILICON CARBIDES
Graded junction termination extensions for electronic devices – 32

Miniaturized metal (metal alloy)/PdO.sub.x/SiC hydrogen and hydrocarbon gas sensors – 20

Silicon carbide and other films and method of deposition – 21

SILICON FILMS
Silicon carbide and other films and method of deposition – 21

SILICONES
Elastomeric actuator devices for magnetic resonance imaging – 48

SIMULATION
Whole-body mathematical model for simulating intracranial pressure dynamics – 60

SINGLE CRYSTALS
Cr.sup.4+-doped mixed alloy laser materials and lasers and methods using the materials – 49

Low Density, High Creep Resistant Single Crystal Super Alloy for Turbine Airfoils – 19

Low density, high creep resistant single crystal superalloy for turbine airfoils – 19

Schottky barrier diode and method thereof – 39

Silicon germanium semiconductive alloy and method of fabricating same – 20

Wafer bonded epitaxial templates for silicon heterostructures – 77

SITUATIONAL AWARENESS
Reconfigurable Auditory-Visual Display – 29

SLEEVES
Friction stir weld tools – 53

SLOT ANTENNAS
Slotted antenna waveguide plasma source – 77

SLOTS
Dual-polarized feed antenna apparatus and method of use – 28

SOLAR ARRAYS
Aircraft control system – 6

SOLID WASTES
Pyrolysis process for producing fuel gas – 63

Pyrolysis processing for solid waste resource recovery – 16

SOLIDS
Solid freeform fabrication apparatus and methods – 80

SOLVENTS
Catalytic dehydrogenation of amine borane complexes – 17

SOUND GENERATORS
Electromechanical acoustic liner – 33

SOUND WAVES
Electromechanical acoustic liner – 33

SPACE DEBRIS
Method and associated apparatus for capturing, servicing, and de-orbiting earth satellites using robotics – 7

SPACE TRANSPORTATION
Methods and systems for advanced spaceport information management – 8

Methods and Systems for Advanced Spaceport Information Management – 8

SPACECRAFT EQUIPMENT
Composite shell spacecraft seat – 64

SPACECRAFT ORBITS
Method for deploying multiple spacecraft – 7

SPACECRAFT STRUCTURES
Method and associated apparatus for capturing, servicing, and de-orbiting earth satellites using robotics – 7

SPECTROMETERS
Spectrometer system for optical reflectance measurements – 73

SPECTROSCOPY
Near re-entrant dense pattern optical multipass cell – 70

SPONTANEOUS EMISSION
2-.mu.m fiber amplified spontaneous emission (ASE) source – 71

SPORES
Method bacterial endospore quantification using lanthanide dipicolinate luminescence – 59

SPRAYERS
Actuated atomizer – 44

SPREADSHEETS
Definition and maintenance of a telemetry database dictionary – 81

SQUID (DETECTORS)
Charge dissipative dielectric for cryogenic devices – 30

STABILITY
2-.mu.m fiber amplified spontaneous emission (ASE) source – 71

STABILIZATION
Devices and methods of operation thereof for providing stable flow for centrifugal compressors – 24

Opto-electronic feedback for stabilizing oscillators – 75

STAGNATION POINT
Stagnation point reverse flow combustor for a combustion system – 43

STARS
Integrated inertial stellar attitude sensor – 9

STATORS
MEMS micro-translation device with improved linear travel capability – 29

STEELS
Corrosion prevention of cold rolled steel using water dispersible lignosulfonic acid doped polyaniline – 16

Corrosion Prevention of Cold Rolled Steel Using Water Dispersible Lignosulfonic Acid Doped Polyaniline – 19

STERILIZATION
Bacillus pumilus SAFR-032 isolate – 59

Method bacterial endospore quantification using lanthanide dipicolinate luminescence – 59

STRAPS
Connector adapter – 51

STRESS DISTRIBUTION
Silicon carbide and other films and method of deposition – 21

STRINGS
String resistance detector – 32

SUBSTRATES
Carbon nanotube-based sensor and method for detection of crack growth in a structure – 35

Increased alignment in carbon nanotube growth – 34

Sensor chip and apparatus for tactile and/or flow sensing – 39

Silicon germanium semiconductive alloy and method of fabricating same – 20

Single substrate camera device with CMOS image sensor – 48

Wafer bonded virtual substrate and method for forming the same – 31

SUPERCHARGERS
Supercharged two-cycle engines employing novel single element reciprocating shuttle inlet valve mechanisms and with a variable compression ratio – 55

SUPERCONDUCTIVITY
Charge dissipative dielectric for cryogenic devices – 30

SUPPORTS
Sample mounts for microcrystal crystallography – 78

SURFACE EMITTING LASERS
Communication using VCSEL laser array – 49

SURFACE PROPERTIES
Functionalization of carbon nanotubes – 35

SURVEILLANCE
Asset surveillance system: apparatus and method – 64

SUSPENSIONS
Rapid flow fractionation of particles combining liquid and particulate dielectrophoresis – 36

SWITCHES
Distributed solid state programmable thermostat/power controller – 38

SYNTHETIC RUBBERS
Polybenzoxazole-filled nitrile butadiene rubber compositions – 14

SYSTEMS ANALYSIS
System for solving diagnosis and hitting set problems – 68

SYSTEMS ENGINEERING
Functionalization of Carbon Nanotubes – 79

System for controlling child safety seat environment – 43

SYSTEMS HEALTH MONITORING
Inductive monitoring system constructed from nominal system data and its use in real-time system monitoring – 69

System for solving diagnosis and hitting set problems – 68

SYSTEMS MANAGEMENT
Methods and systems for advanced spaceport information management – 8

Methods and Systems for Advanced Spaceport Information Management – 8

TEETH
Computer-implemented system and method for automated and highly accurate plaque analysis, reporting, and visualization – 62

TELEMETRY
Definition and maintenance of a telemetry database dictionary – 81

Method of remotely estimating a rest or best lock frequency of a local station receiver using telemetry – 26

TEMPERATURE CONTROL
Atomizer for thermal management system – 54

Thermal modulation for gas chromatography – 35

TEMPLATES
Template reporter bacteriophage platform and multiple bacterial detection assays based thereon – 59

Video sensor with range measurement capability – 47

TESTS
Methods and systems for advanced spaceport information management – 8

THERMAL CONDUCTIVITY
– 13

THERMAL CONTROL COATINGS
Low conductivity and sintering-resistant thermal barrier coatings – 53

THERMAL EXPANSION
Toughened uni-piece, fibrous, reinforced, oxidization-resistant composite – 14

THERMAL PROTECTION
Toughened uni-piece, fibrous, reinforced, oxidization-resistant composite – 14

THERMAL RESISTANCE
Method of making carbon fiber-carbon matrix reinforced ceramic composites – 12

THERMAL STABILITY
Approach for achieving flame retardancy while retaining physical properties in a compatible polymer matrix – 11

THERMOELECTRICITY
Methods for synthesis of semiconductor nanocrystals and thermoelectric compositions – 78

System for controlling child safety seat environment – 43

THERMOSTATS
Distributed solid state programmable thermostat/power controller – 38

THIN FILMS
Flexible carbon-based ohmic contacts for organic transistors – 30

Sample mounts for microcrystal crystallography – 77

THREADS
Self-advancing step-tap tool – 54

THREE DIMENSIONAL MOTION
– 72

THRESHOLDS
Optimal binarization of gray-scaled digital images via fuzzy reasoning – 44

THRUST BEARINGS
Thrust rollers – 50

TIME LAG
Delay banking for air traffic management – 3

TIMING DEVICES
– 72

TIN OXIDES
Stabilized tin-oxide-based oxidation/reduction catalysts – 19

TISSUES (BIOLOGY)
Apparatus for enhancing tissue repair in mammals – 61

Method and apparatus to assess compartment syndrome – 62

TOMOGRAPHY
Hybrid-dual-fourier tomographic algorithm for a fast three-dimensionial optical image reconstruction in turbid media – 45

TOOLS
Friction Stir Weld Tools – 54

TOOTH DISEASES
Computer-implemented system and method for automated and highly accurate plaque analysis, reporting, and visualization – 62

TORQUE
System and method for improved rotor tip performance – 3

TOXICITY
Compositions and methods for removal of toxic metals and radionuclides – 58

TRAFFIC CONTROL
Detection and enforcement of failure-to-yield in an emergency vehicle preemption system – 23

TRANSDUCERS
Wideband radial power combiner/divider fed by a mode transducer – 28

TRANSFORMATIONS (MATHEMATICS)
Hypothesis support mechanism for mid-level visual pattern recognition – 67

TRANSISTORS
Cross-differential amplifier – 39

Flexible carbon-based ohmic contacts for organic transistors – 30

TRANSITION METALS
Cobalt ferrite based magnetostrictive materials for magnetic stress sensor and actuator applications – 20

TRANSMISSION
Method and systems for a radiation tolerant bus interface circuit – 26

TUNABLE LASERS
Cr.sup.4+-doped mixed alloy laser materials and lasers and methods using the materials – 49

TURBINES
Low Density, High Creep Resistant Single Crystal Super Alloy for Turbine Airfoils – 19

TWISTING
Active multistable twisting device – 56

ULTRAVIOLET RADIATION
Bacillus pumilus SAFR-032 isolate – 59

UNDERWATER VEHICLES
Underwater vehicle propulsion and power generation – 55

VACUUM
Multiple internal seal right micro-electro-mechanical system vacuum package – 34

VALVES
Supercharged two-cycle engines employing novel single element reciprocating shuttle inlet valve mechanisms and with a variable compression ratio – 55

VAPOR PHASE EPITAXY
Schottky barrier diode and method thereof – 39

VECTOR ANALYSIS
Hybrid neural network and support vector machine method for optimization – 67

VEGETATION
Method and system for spatially variable rate application of agricultural chemicals based on remotely sensed vegetation data – 57

VERTEBRATES
Apparatus and method for centrifugation and robotic manipulation of samples – 61

VIBRATION
System and method for improved rotor tip performance – 3

System and method of analyzing vibrations and identifying failure signatures in the vibrations – 55

VISIBLE SPECTRUM
Cathode luminescence light source for broadband applications in the visible spectrum – 72

VISUAL SIGNALS
Reconfigurable Auditory-Visual Display – 29

VOLATILE ORGANIC COMPOUNDS
Oxidation-reduction catalyst and its process of use – 18

VOLTAGE AMPLIFIERS
Cross-differential amplifier – 39

VOLUMETRIC EFFICIENCY
Supercharged two-cycle engines employing novel single element reciprocating shuttle inlet valve mechanisms and with a variable compression ratio – 55

WAFERS
Wafer bonded virtual substrate and method for forming the same – 31

WALLS
Electromechanical acoustic liner – 33

WARNING SYSTEMS
Auditory alert systems with enhanced detectability – 69

WASTE TREATMENT
Compositions and methods for removal of toxic metals and radionuclides – 58

WASTES
Struvite crystallization – 60

WATER TREATMENT
Removal of PCB and Other Halogenated Organic Contaminants found in Ex Situ Structures – 17

WATER
Water outlet control mechanism for fuel cell system operation in variable gravity environments – 9

WAVEGUIDES
Slotted antenna waveguide plasma source – 77

WEAR RESISTANCE
Process for self-repair of insulation material – 22

WEIGHTLESSNESS
Gas volume contents within a container, smart volume instrument – 69

WELDING
Friction Stir Weld Tools – 54

WINGS
Aircraft control system – 6

WIRELESS COMMUNICATION
Hand held device for wireless powering and interrogation of biomems sensors and actuators – 52

Reconfigurable Auditory-Visual Display – 28

Wireless Instrumentation System and Power Management Scheme Therefore – 36

WIRE
Process for attaching molecular wires and devices to carbon nanotubes and compositions thereof – 41

WRENCHES
Screw-locking wrench – 52

X RAY ABSORPTION
Method and apparatus for multiple-projection, dual-energy x-ray absorptiometry scanning – 46

X RAYS
Sample mounts for microcrystal crystallography – 78

ZEOLITES
Crystalline Membranes – 18

Author Index

Abbasfar, Aliazam
ARA type protograph codes – 64

Abushagur, Mustafa A. G.
MEMS micro-translation device with improved linear travel capability – 29

Adamovich, Igor
Localized arc filament plasma actuators for noise mitigation and mixing enhancement – 43

A'Harrah, Ralph C.
Method and apparatus for loss of control inhibitor systems – 4

Ahmed, Rajib
Rapid flow fractionation of particles combining liquid and particulate dielectrophoresis – 36

Ahronovich, Eliezer
Nonsurvivable momentum exchange system – 1

Alexander, Jane C.
Distributed solid state programmable thermostat/power controller – 38

Alfano, Robert R.
Cr.sup.4+-doped mixed alloy laser materials and lasers and methods using the materials – 49

Hybrid-dual-fourier tomographic algorithm for a fast three-dimensionial optical image reconstruction in turbid media – 45

Methods and systems for detection of ice formation on surfaces – 2

Amador, Jose J
Hypothesis support mechanism for mid-level visual pattern recognition – 67

Anderson, Mark R.
Reconfigurable Auditory-Visual Display – 28

Andrews, Kenneth S.
ARA type protograph codes – 64

Aoki, Ichiro
Cross-differential amplifier – 39

Appel, Philip W.
Atomizer for thermal management system – 54

Appel, Philip
Actuated atomizer – 43

Arenare, Brian
System for the diagnosis and monitoring of coronary artery disease, acute coronary syndromes, cardiomyopathy and other cardiac conditions – 63

Aslam, Shahid
Schottky barrier diode and method thereof – 39

Atwater, Harry A., Jr.
Wafer bonded epitaxial templates for silicon heterostructures – 77

Atwater, Jr., Harry A.
Wafer bonded virtual substrate and method for forming the same – 31

Avila-Segura, Mauricio
Struvite crystallization – 60

Bachelder, Aaron D.
Roadside-based communication system and method – 25

Bachelder, Aaron
Detection and enforcement of failure-to-yield in an emergency vehicle preemption system – 23

Bae, Youngsam
Multiple internal seal right micro-electro-mechanical system vacuum package – 34

Bahr, Jeffrey L.
Process for attaching molecular wires and devices to carbon nanotubes and compositions thereof – 41

Process for derivatizing carbon nanotubes with diazonium species – 15

Process for making polymers comprising derivatized carbon nanotubes and compositions thereof – 21

Banks, Bruce A.
Energetic atomic and ionic oxygen textured optical surfaces for blood glucose monitoring – 71

Energetic Atomic and Ionic Oxygen Textured Optical Surfaces for Blood Glucose Monitoring – 76

Method for texturing surfaces of optical fiber sensors used for blood glucose monitoring – 70

Protective coating and hyperthermal atomic oxygen texturing of optical fibers used for blood glucose monitoring – 62

Barackman, Victor J.
Composite shell spacecraft seat – 63

Barak, Phillip W.
Struvite crystallization – 60

Bauhahn, Paul E.
Low power switching for antenna reconfiguration – 27

Bearden, Douglas B.
Low power, high voltage power supply with fast rise/fall time – 33

Beck, Thomas J.
Method and apparatus for multiple-projection, dual-energy x-ray absorptiometry scanning – 46

Becker, Robert C.
Low power switching for antenna reconfiguration – 27

Begault, Durand R.
Auditory alert systems with enhanced detectability – 69

Reconfigurable Auditory-Visual Display – 28

Benander, Robert
Method of making carbon fiber-carbon matrix reinforced ceramic composites – 12

Berger, Cristina M.
Removal of PCB and Other Halogenated Organic Contaminants found in Ex Situ Structures – 17

Removal of PCB and other halogenated organic contaminants found in ex situ structures – 58

Bergman, Lawrence David
Methods and apparatus for extraction and tracking of objects from multi-dimensional sequence data – 81

Bickford, Randall L.
Asset surveillance system: apparatus and method – 64

Birr, Richard B.
Communication system with adaptive noise suppression – 26

Bishop, James E.
System and method for transferring data on a data link – 25

Blackwell-Thompson, Charlie
Methods and systems for advanced spaceport information management – 8

Methods and Systems for Advanced Spaceport Information Management – 8

Blalock, Norman N.
Wireless Instrumentation System and Power Management Scheme Therefore – 36

Block, Bruce P.
Thermal modulation for gas chromatography – 35

Bonanni, Pierino Gianni
Method and apparatus for in-situ detection and isolation of aircraft engine faults – 56

Bormann, Keith A.
Cobalt ferrite based magnetostrictive materials for magnetic stress sensor and actuator applications – 20

Bradley, Karla F.
Water outlet control mechanism for fuel cell system operation in variable gravity environments – 9

Brady, Tye M.
Integrated inertial stellar attitude sensor – 9

Brandon, Erik
Flexible carbon-based ohmic contacts for organic transistors – 30

Bray, Terry L.
Use of dye to distinguish salt and protein crystals under microcrystallization conditions – 78

Briscoe, Jeri M.
Video sensor with range measurement capability – 47

Broderick, David J.
Video sensor with range measurement capability – 47

Brotherton, Thomas
Bootstrap data methodology for sequential hybrid model building – 5

Brown, Thomas G.
Mechanisms and methods for selective wavelength filtering – 75

Brucker, Russell X.
Image and information management system – 80

Brunell, Brent Jerome
Method and apparatus for in-situ detection and isolation of aircraft engine faults – 56

Buckle, Kenneth A.
Dual-polarized feed antenna apparatus and method of use – 28

Budansky, Yury
Methods and systems for detection of ice formation on surfaces – 2

Burge, Scott W.
Connector adapter – 51

Burns, Richard D.
Method and associated apparatus for capturing, servicing and de-orbiting earth satellites using robotics – 1

Method and associated apparatus for capturing, servicing, and de-orbiting earth satellites using robotics – 7

Bussom, Richard
System and method for improved rotor tip performance – 3

Bykov, Alexey
Cr.sup.4+-doped mixed alloy laser materials and lasers and methods using the materials – 49

Cai, Wei
Hybrid-dual-fourier tomographic algorithm for a fast three-dimensionial optical image reconstruction in turbid media – 45

Calise, Anthony J.
Adaptive control system having hedge unit and related apparatus and methods – 67

Camarda, Charles J.
Self-advancing step-tap tool – 54

Cantor, Robin Harold
Charge dissipative dielectric for cryogenic devices – 30

Carder, Kendall L.
Method and program product for determining a radiance field in an optical environment – 75

Carter, Robert W.
Friction stir weld tools – 53

Friction Stir Weld Tools – 54

Castelli, Vittorio
Methods and apparatus for extraction and tracking of objects from multidimensional sequence data – 81

Cattafesta, III, Louis N.
Electromechanical acoustic liner – 32

Cepollina, Frank J.
Method and associated apparatus for capturing, servicing and de-orbiting earth satellites using robotics – 1

Method and associated apparatus for capturing, servicing, and de-orbiting earth satellites using robotics – 7

Challoner, A. Dorian
Cloverleaf microgyroscope with electrostatic alignment and tuning – 52

Integral resonator gyroscope – 24

Multiple internal seal right micro-electromechanical system vacuum package – 34

Chang, Yuan-Chi
Methods and apparatus for extraction and tracking of objects from multidimensional sequence data – 81

Chao, Tien-Hsin
Holographic memory using beam steering – 45

Chao, Yi
Underwater vehicle propulsion and power generation – 55

Charles, Jr., Harry K.
Method and apparatus for multiple-projection, dual-energy x-ray absorptiometry scanning – 46

Chattin, Richard L.
System and method for monitoring piezoelectric material performance – 78

Chen, Gang
Methods for synthesis of semiconductor nanocrystals and thermoelectric compositions – 78

Chen, Jack
Sensor chip and apparatus for tactile and/or flow sensing – 39

Chen, Weinong
Sub-diffraction limit resolution in microscopy – 74

Cheng, Andrew F.
Data compression using Chebyshev transform – 66

Cheng, Ming
Sub-diffraction limit resolution in microscopy – 74

Chin, Robert C.
Signal generation and mixing electronics for frequency-domain lifetime and spectral fluorometry – 70

Choi, Sang H.
Ferroelectric Light Control Device – 40

Method and system for sensing and identifying foreign particles in a gaseous environment – 47

Silicon germanium semiconductive alloy and method of fabricating same – 20

Chuang, Shun Lien
Interband cascade detectors – 79

Chutjian, Ara
Chemical sensor system – 10

Clausen, Christian
Removal of PCB and Other Halogenated Organic Contaminants found in Ex Situ Structures – 17

Removal of PCB and other halogenated organic contaminants found in ex situ structures – 58

Cole, Robert M.
System and method for transferring data on a data link – 25

Cook, Ronald Lee
Nanoparticles modified with multiple organic acids – 12

Coon, Christina
Removal of PCB and Other Halogenated Organic Contaminants found in Ex Situ Structures – 17

Removal of PCB and other halogenated organic contaminants found in ex situ structures – 58

Corbo, James E.
Method and associated apparatus for capturing, servicing and de-orbiting earth satellites using robotics – 1

Method and associated apparatus for capturing, servicing, and de-orbiting earth satellites using robotics – 7

Corder, Eric L.
Video sensor with range measurement capability – 47

Cosenza, Larry
Use of dye to distinguish salt and protein crystals under microcrystallization conditions – 78

Coxe, Robin L.
Reconfigurable environmentally adaptive computing – 66

Cruce, Tommy Clay
Signal generation and mixing electronics for frequency-domain lifetime and spectral fluorometry – 70

Cuero, Raul G.
Compositions and methods for removal of toxic metals and radionuclides – 58

Cumpston, Brian
Two-photon or higher-order absorbing optical materials for generation of reactive species – 74

Cunningham, Thomas J.
Increasing the dynamic range of CMOS photodiode imagers – 31

Dabney, Richard W.
Cushion system for multi-use child safety seat – 24

Cushion System for Multi-Use Child Safety Seat – 53

System for controlling child safety seat environment – 43

Darrach, Murray R.
Chemical sensor system – 10

Dartez, Toby W.
Connector adapter – 51

Davies, Francis J.
String resistance detector – 32

Davis, III, Milton C.
Nonsurvivable momentum exchange system – 1

Davis, Patricia P.
Stabilized tin-oxide-based oxidation/reduction catalysts – 18

Dean, Richard J.
Connector adapter – 51

Degnan, John J.
– 72

DeLucas, Lawrence J.
Use of dye to distinguish salt and protein crystals under microcrystallization conditions – 78

Delzeit, Lance D.
Increased alignment in carbon nanotube growth – 34

Devault, James A.
Communication system with adaptive noise suppression – 26

Dey, Thomas W.
Optical nulling apparatus and method for testing an optical surface – 76

Dhamne, Abhijeet
Method of making fine lithium iron phosphate/carbon-based powders with an olivine type structure – 58

Divsalar, Dariush
ARA type protograph codes – 64

Serial turbo trellis coded modulation using a serially concatenated coder – 66

Dolinar, Sam
Serial turbo trellis coded modulation using a serially concatenated coder – 66

Dolinar, Samuel J.
ARA type protograph codes – 64

Dominguez, Jesus A.
Optimal binarization of gray-scaled digital images via fuzzy reasoning – 44

Dominquez, Jesus A.
Image Edge Extraction via Fuzzy Reasoning – 48

Dorn, Harry C.
Endohedral Metallofullerene Derivatives – 20

Dougherty, Dennis M.
Image and information management system – 80

Dresselhaus, Mildred
Methods for synthesis of semiconductor nanocrystals and thermoelectric compositions – 78

Dubowsky, Steven
Elastomeric actuator devices for magnetic resonance imaging – 48

Duchamp, James
Endohedral Metallofullerene Derivatives – 20

Dugan, Edward T.
Radiography by selective detection of scatter field velocity components – 45

Dunning, Jeremy L.
Silicon carbide and other films and method of deposition – 21

Eckhoff, Anthony
Wireless Instrumentation System and Power Management Scheme Therefore – 36

Egget, Mark R.
Method and apparatus for detecting and determining event characteristics with reduced data collection – 30

Eggink, Laura
Method of producing purified carotenoid compounds – 16

Eichenberg, Dennis J.
Hybrid power management system and method – 30

Hybrid Power Management System and Method – 37

Ellerbrock, Philip J.
Network device interface for digitally interfacing data channels to a controller via a network – 66

Elliott, Brian John
Nanoparticles modified with multiple organic acids – 12

Elliott, Jr., James R.
Ferroelectric Light Control Device – 40

Elrod, Susan V.
Cushion system for multi-use child safety seat – 24

Cushion System for Multi-Use Child Safety Seat – 53

System for controlling child safety seat environment – 43

Ely, Donald W.
Methods and systems for advanced spaceport information management – 8

Methods and Systems for Advanced Spaceport Information Management – 8

Engel, Jonathan
Sensor chip and apparatus for tactile and/or flow sensing – 39

English, Jennifer M.
MEMS micro-translation device with improved linear travel capability – 29

Envia, Edmane
Low-noise fan exit guide vanes – 5

Epp, Larry W.
Wideband radial power combiner/divider fed by a mode transducer – 28

Esser, Brian
Self-healing cable apparatus and methods – 11

Everton, Randy L.
Method and apparatus for detecting and determining event characteristics with reduced data collection – 30

Feldmesser, Howard S.
Method and apparatus for multiple-projection, dual-energy x-ray absorptiometry scanning – 46

Ferguson, Cynthia K.
MEMS micro-translation device with improved linear travel capability – 29

Fielhauer, Karl B.
Method of remotely estimating a rest or best lock frequency of a local station receiver using telemetry – 26

Fijany, Amir
System for solving diagnosis and hitting set problems – 68

Filipek, Laura B.
Removal of PCB and Other Halogenated Organic Contaminants found in Ex Situ Structures – 17

Removal of PCB and other halogenated organic contaminants found in ex situ structures – 58

Fossum, Eric R.
Image sensor with high dynamic range linear output – 74

Single substrate camera device with CMOS image sensor – 48

Foster, John E.
Cathode luminescence light source for broadband applications in the visible spectrum – 72

Foster, John
Slotted antenna waveguide plasma source – 77

Fox, Christopher L.
System and method for monitoring piezoelectric material performance – 78

Fox, Melanie L.
System and method for monitoring piezoelectric material performance – 78

Fox, Robert L.
System and method for monitoring piezoelectric material performance – 78

Franklin, Larry D.
Self-advancing step-tap tool – 54

Franz, David
Schottky barrier diode and method thereof – 39

Fraser, Scott
Method and apparatus for low-loss signal transmission – 27

Fu, Xiao-An
Silicon carbide and other films and method of deposition – 21

Fussell, Ronald M.
Methods and systems for advanced spaceport information management – 8

Methods and Systems for Advanced Spaceport Information Management – 8

Gabb, Timothy P.
Low Density, High Creep Resistant Single Crystal Super Alloy for Turbine Airfoils – 19

Low density, high creep resistant single crystal superalloy for turbine airfoils – 19

Gajiwala, Himansu M.
Polybenzoxazole-filled nitrile butadiene rubber compositions – 14

Galica, Gary E.
Reconfigurable environmentally adaptive computing – 66

Gaucher, Brian P.
Apparatus and methods for packaging integrated circuit chips with antenna modules providing closed electromagnetic environment for integrated antennas – 40

Geiger, Cherie L.
Removal of PCB and Other Halogenated Organic Contaminants found in Ex Situ Structures – 17

Removal of PCB and other halogenated organic contaminants found in ex situ structures – 58

Geng, Jihong
2-.mu.m fiber amplified spontaneous emission (ASE) source – 71

Gester, Thomas E.
Use of dye to distinguish salt and protein crystals under microcrystallization conditions – 78

Giletto, Anthony
Transdermal delivery of therapeutic agent – 38

Goodridge, Lawrence
Template reporter bacteriophage platform and multiple bacterial detection assays based thereon – 59

Goodwin, Thomas J.
Apparatus for enhancing tissue repair in mammals – 61

Goodwin, Thomas John
Production of functional proteins: balance of shear stress and gravity – 61

Goorjian, Peter M.
Communication using VCSEL laser array – 49

Goswami, D. Yogi
Dual-polarized feed antenna apparatus and method of use – 28

Grant, Robert L.
Network device interface for digitally interfacing data channels to a controller via a network – 66

Green, Steven M.
Delay banking for air traffic management – 3

Gruhlke, Russell
Mechanisms and methods for selective wavelength filtering – 75

Grzyb, Janusz
Apparatus and methods for packaging integrated circuit chips with antenna modules providing closed electromagnetic environment for integrated antennas – 40

Guillot, David G.
EPDM rocket motor insulation – 10

Polybenzoxazole-filled nitrile butadiene rubber compositions – 14

Gulati, Suresh T.
Stabilized tin-oxide-based oxidation/reduction catalysts – 18

Gutierrez, Roman C.
Cloverleaf microgyroscope with electrostatic alignment and tuning – 52

Hacker, Scott C.
Connector adapter – 51

Hafez, Moustapha
Elastomeric actuator devices for magnetic resonance imaging – 48

Hafley, Robert A.
Solid freeform fabrication apparatus and methods – 80

Hajimiri, Seyed-Ali
Cross-differential amplifier – 39

Hall, A. Daniel
String resistance detector – 32

Hall, John Addison
Charge dissipative dielectric for cryogenic devices – 30

Hallidy, William H.
Signal generation and mixing electronics for frequency-domain lifetime and spectral fluorometry – 70

Halpin, Paul C.
Methods and systems for advanced spaceport information management – 8

Methods and Systems for Advanced Spaceport Information Management – 8

Hammond, Timothy Grant
Production of functional proteins: balance of shear stress and gravity – 61

Hamrick, David T.
Use of dye to distinguish salt and protein crystals under microcrystallization conditions – 78

Hanan, Jay C.
Holographic memory using beam steering – 45

Hancock, Bruce R.
Increasing the dynamic range of CMOS photodiode imagers – 31

Hannon, John J.
Optical nulling apparatus and method for testing an optical surface – 76

Hargens, Alan R.
Method and apparatus to assess compartment syndrome – 62

Hartley, Frank T.
Fuel cell with ionization membrane – 23

Ion thrusting system – 79

Harvey, Albert R.
EPDM rocket motor insulation – 10

Hashmonay, Ben-Ami
Stagnation point reverse flow combustor for a combustion system – 42

Hasselbrink, Ernest F.
Thermal modulation for gas chromatography – 35

Hawkins, III, S. Edward
Data compression using Chebyshev transform – 66

Hayes, Ryan T.
Transdermal delivery of therapeutic agent – 38

Hayworth, Ken J.
Integral resonator gyroscope – 24

Multiple internal seal right micro-electromechanical system vacuum package – 34

Heidelberg, Laurence J.
Low-noise fan exit guide vanes – 5

Hersam, Mark C.
Methods and apparatus of spatially resolved electroluminescence of operating organic light-emitting diodes using conductive atomic force microscopy – 37

Hershey, John Erik
Short range RF communication for jet engine control – 6

Hill, Matthew L.
Methods and apparatus for extraction and tracking of objects from multidimensional sequence data – 81

Holz, Jill M.
Method and associated apparatus for capturing, servicing and de-orbiting earth satellites using robotics – 1

Method and associated apparatus for capturing, servicing, and de-orbiting earth satellites using robotics – 7

Hood, Kenneth Brown
Method and system for spatially variable rate application of agricultural chemicals based on remotely sensed vegetation data – 57

Hoppe, Daniel J.
Wideband radial power combiner/divider fed by a mode transducer – 28

Horowitz, Stephen Brian
Electromechanical acoustic liner – 32

Howard, David E.
Distributed solid state programmable thermostat/power controller – 38

Howard, Richard T.
Video sensor with range measurement capability – 47

Hu, Qing
Terahertz lasers and amplifiers based on resonant optical phonon scattering to achieve population inversion – 73

Huang, Ngan Fong
Carbon Nanotube Reinforced Porous Carbon Having Three-Dimensionally Ordered Porosity and Method of Fabricating Same – 13

Carbon nanotube reinforced porous carbon having three-dimensionally ordered porosity and method of fabricating same – 22

Huang, Norden E.
System and method of analyzing vibrations and identifying failure signatures in the vibrations – 55

Hughes, Eli
Thin, nearly wireless adaptive optical device – 46

Hunter, Gary W.
Miniaturized metal (metal alloy)/PdO.sub.x/SiC hydrogen and hydrocarbon gas sensors – 20

Miniaturized Metal (Metal Alloy)/PdO(x)/SiC Hydrogen and Hydrocarbon Gas Sensors – 42

Huston, Dryver
Self-healing cable apparatus and methods – 11

Iezzi, Erick B.
Endohedral Metallofullerene Derivatives – 20

Ilchenko, Vladimir
Opto-electronic feedback for stabilizing oscillators – 75

Ingram, JoAnne L.
Carbon nanotube-based sensor and method for detection of crack growth in a structure – 35

Isaacs-Smith, Tamara
Graded junction termination extensions for electronic devices – 32

Iverson, David L.
Inductive monitoring system constructed from nominal system data and its use in real-time system monitoring – 68

Jacobs, Alan M.
Radiography by selective detection of scatter field velocity components – 45

Jacobson, Craig A.
Methods and systems for advanced spaceport information management – 8

Methods and Systems for Advanced Spaceport Information Management – 8

Jagoda, Jechiel
Stagnation point reverse flow combustor for a combustion system – 42

Jedhrich, Nicholas M.
Method and associated apparatus for capturing, servicing and de-orbiting earth satellites using robotics – 1

Method and associated apparatus for capturing, servicing, and de-orbiting earth satellites using robotics – 7

Jensen, Arthur E.
Optical nulling apparatus and method for testing an optical surface – 76

Jensen, James R.
Method of remotely estimating a rest or best lock frequency of a local station receiver using telemetry – 26

Jett, Thomas A.
Devices and methods of operation thereof for providing stable flow for centrifugal compressors – 24

Jiang, Shibin
2-.mu.m fiber amplified spontaneous emission (ASE) source – 71

Jiles, David C.
Cobalt ferrite based magnetostrictive materials for magnetic stress sensor and actuator applications – 20

Johnson, Eric Norman
Adaptive control system having hedge unit and related apparatus and methods – 67

Johnson, James William
Method and system for spatially variable rate application of agricultural chemicals based on remotely sensed vegetation data – 57

Jolesz, Ferenc A.
Elastomeric actuator devices for magnetic resonance imaging – 48

Jones, Christopher R.
ARA type protograph codes – 64

Jones, Jack A.
Underwater vehicle propulsion and power generation – 55

Jones, Michael G.
Low-noise fan exit guide vanes – 5

Jones, Thomas B.
Rapid flow fractionation of particles combining liquid and particulate dielectrophoresis – 36

Jordan, Jeffrey D.
Oxidation-reduction catalyst and its process of use – 18

Stabilized tin-oxide-based oxidation/reduction catalysts – 18

Kacher, Daniel F.
Elastomeric actuator devices for magnetic resonance imaging – 48

Kaysen, James Howard
Production of functional proteins: balance of shear stress and gravity – 61

Keba, John E.
Shaft seal assembly and method – 51

Kee, Scott D.
Cross-differential amplifier – 39

Kelley, Anthony R.
Gas volume contents within a container, smart volume instrument – 69

Kelley, Daniel
Wideband radial power combiner/divider fed by a mode transducer – 28

Kemp, James Herbert
Computer-implemented system and method for automated and highly accurate plaque analysis, reporting, and visualization – 62

Kendall, Greg T.
Aircraft control system – 6

Kennedy, David J.
Apparatus and method for centrifugation and robotic manipulation of samples – 61

Kent, Peter C.
Image and information management system – 80

Khan, Abdur R.
Wideband radial power combiner/divider fed by a mode transducer – 28

Khare, Bishun N.
Functionalization of carbon nanotubes – 35

Functionalization of Carbon Nanotubes – 79

Kim, Jae-Woo
Ferroelectric Light Control Device – 40

King, Glen C.
Ferroelectric Light Control Device – 40

Silicon germanium semiconductive alloy and method of fabricating same – 20

King, Michael R.
Rapid flow fractionation of particles combining liquid and particulate dielectrophoresis – 36

Kinstler, Gary A.
Method and systems for a radiation tolerant bus interface circuit – 26

Kintner, Jr., Paul M.
Real-time software receiver – 25

Kirby, James Patrick
Method bacterial endospore quantification using lanthanide dipicolinate luminescence – 59

Kirtley, Kevin Richard
Crescentic ramp turbine stage – 5

Kite, Marlen T.
Carbon nanotube-based sensor and method for detection of crack growth in a structure – 35

Klinko, Steve
Image Edge Extraction via Fuzzy Reasoning – 48

Klinko, Steven J.
Optimal binarization of gray-scaled digital images via fuzzy reasoning – 44

Kmetko, Jan
Sample mounts for microcrystal crystallography – 77

Knight, Paul A.
Atomizer for thermal management system – 54

Knopf, William P.
Definition and maintenance of a telemetry database dictionary – 81

Knowles, Gareth
Thin, nearly wireless adaptive optical device – 46

Komjathy, Attila
Generating high precision ionospheric ground-truth measurements – 27

Konishi, Satoshi
Pyrolyzed-parylene based sensors and method of manufacture – 16

Konz, Daniel W.
Network device interface for digitally interfacing data channels to a controller via a network – 66

Kourepenis, Anthony S.
Integrated inertial stellar attitude sensor – 9

Kozel, David
Communication system with adaptive noise suppression – 26

Kreutzer, Cory
Nanoparticles modified with multiple organic acids – 12

Kroo, Erik
Pyrolysis process for producing fuel gas – 63

Pyrolysis processing for solid waste resource recovery – 16

Kumar, Shankar
Methods for synthesis of semiconductor nanocrystals and thermoelectric compositions – 78

Kurk, Michael A.
Apparatus and method for centrifugation and robotic manipulation of samples – 61

Kwiatkowski, Krzysztof C.
Transdermal delivery of therapeutic agent – 38

La Duc, Myron Thomas
Bacillus odysseyi isolate – 60

Lai, Zhiping
Crystalline Membranes – 17

Lakin, William D.
Whole-body mathematical model for simulating intracranial pressure dynamics – 60

Lam, Raymond
Computer-implemented system and method for automated and highly accurate plaque analysis, reporting, and visualization – 62

Lambert, James
Computer-implemented system and method for automated and highly accurate plaque analysis, reporting, and visualization – 62

Lampert, Daryl A.
Image and information management system – 80

Lamson, Scott Henry
Crescentic ramp turbine stage – 5

Lavelle, Joseph P.
High speed three-dimensional laser scanner with real time processing – 50

Ledvina, Brent M.
Real-time software receiver – 25

Lee, Ching-Pang
Crescentic ramp turbine stage – 5

Leighty, Bradley D.
Stabilized tin-oxide-based oxidation/reduction catalysts – 18

Leiser, Daniel B.
Toughened uni-piece, fibrous, reinforced, oxidization-resistant composite – 14

Lewis, Mark David
Method and system for spatially variable rate application of agricultural chemicals based on remotely sensed vegetation data – 57

Li, Chung-Sheng
Methods and apparatus for extraction and tracking of objects from multi-dimensional sequence data – 81

Li, Jian
Interband cascade detectors – 79

Li, Jun
Nanoengineered thermal materials based on carbon nanotube array composites – 35

– 13

Libardoni, Mark
Thermal modulation for gas chromatography – 35

Lichter, Matthew
Elastomeric actuator devices for magnetic resonance imaging – 48

Liger, Matthieu
Pyrolyzed-parylene based sensors and method of manufacture – 16

Lipson, Matthew
Two-photon or higher-order absorbing optical materials for generation of reactive species – 74

Lisoski, Derek L.
Aircraft control system – 6

Liu, Chang
Sensor chip and apparatus for tactile and/or flow sensing – 39

Liu, Duixian
Apparatus and methods for packaging integrated circuit chips with antenna modules providing closed electromagnetic environment for integrated antennas – 40

Lo, Chester C. H.
Cobalt ferrite based magnetostrictive materials for magnetic stress sensor and actuator applications – 20

Lomakin, Oleg
Rapid flow fractionation of particles combining liquid and particulate dielectrophoresis – 36

Lucena, Angel
Wireless Instrumentation System and Power Management Scheme Therefore – 36

Luebben, Silvia DeVito
Nanoparticles modified with multiple organic acids – 12

Lukco, Dorothy
Miniaturized metal (metal alloy)/PdO.sub.x/SiC hydrogen and hydrocarbon gas sensors – 20

Miniaturized Metal (Metal Alloy)/PdO(x)/SiC Hydrogen and Hydrocarbon Gas Sensors – 42

MacKay, Rebecca A.
Low Density, High Creep Resistant Single Crystal Super Alloy for Turbine Airfoils – 19

Low density, high creep resistant single crystal superalloy for turbine airfoils – 19

MacLeod, Todd C.
Nonvolatile analog memory – 65

Macon, David J.
Method and apparatus for detecting and determining event characteristics with reduced data collection – 30

Magee, Thomas C.
Method and apparatus for multiple-projection, dual-energy x-ray absorptiometry scanning – 46

Magnuson, James W.
Transdermal delivery of therapeutic agent – 38

Maleki, Lutfollah
Opto-electronic feedback for stabilizing oscillators – 75

Mannucci, Anthony J.
Generating high precision ionospheric ground-truth measurements – 27

Marder, Seth R
Two-photon or higher-order absorbing optical materials for generation of reactive species – 74

Mata, Carlos T.
Wireless Instrumentation System and Power Management Scheme Therefore – 36

McClain, Bryan
Reconfigurable Auditory-Visual Display – 28

McCurdy, Kerri L.
Water outlet control mechanism for fuel cell system operation in variable gravity environments – 9

McDowell, Mark
Tracking of Cells with a Compact Microscope Imaging System with Intelligent Controls – 36

Tracking of cells with a compact microscope imaging system with intelligent controls – 46

McKay, David S.
Compositions and methods for removal of toxic metals and radionuclides – 58

McKee, Sandra D.
Composite shell spacecraft seat – 63

McVeigh, Michael A.
System and method for improved rotor tip performance – 3

Meade, Phillip T.
Methods and systems for advanced spaceport information management – 8

Methods and Systems for Advanced Spaceport Information Management – 8

Medelius, Pedro J.
Wireless Instrumentation System and Power Management Scheme Therefore – 36

Mehregany, Mehran
Silicon carbide and other films and method of deposition – 21

Meier, Gary M.
Methods and systems for advanced spaceport information management – 8

Methods and Systems for Advanced Spaceport Information Management – 8

Meiser, Manfred
Nanoparticles modified with multiple organic acids – 12

Merrett, J. Neil
Graded junction termination extensions for electronic devices – 32

Metz, George W.
Apparatus and method for centrifugation and robotic manipulation of samples – 61

Meyer, Juliane M.
Struvite crystallization – 60

Meyers, David W.
Low power switching for antenna reconfiguration – 27

Meyyappan, Meyya
Functionalization of carbon nanotubes – 35

Functionalization of Carbon Nanotubes – 79

Nanoengineered thermal materials based on carbon nanotube array composites – 35

– 13

Miller, Joel D.
Reconfigurable Auditory-Visual Display – 28

Miller, Robert A.
Low conductivity and sintering-resistant thermal barrier coatings – 53

Milum, Kristen M.
Removal of PCB and Other Halogenated Organic Contaminants found in Ex Situ Structures – 17

Removal of PCB and other halogenated organic contaminants found in ex situ structures – 58

Miranda, Felix Antonio
Hand held device for wireless powering and interrogation of biomems sensors and actuators – 52

Miserendino, Scott
Pyrolyzed-parylene based sensors and method of manufacture – 16

Mohajeri, Nahid
Catalytic dehydrogenation of amine borane complexes – 17

Monaco, Christopher A.
Data compression using Chebyshev transform – 66

Moore, Thomas C.
Carbon nanotube-based sensor and method for detection of crack growth in a structure – 35

Morral, Anna Fontcubera I
Wafer bonded epitaxial templates for silicon heterostructures – 77

Morral, Anna Fontcuberta i
Wafer bonded virtual substrate and method for forming the same – 31

Morrison, Dennis R.
Microparticle analysis system and method – 15

Morrison, John L.
Method of detecting system function by measuring frequency response – 39

Morrison, William H.
Method of detecting system function by measuring frequency response – 39

Moses, Robert W.
System and method for monitoring piezoelectric material performance – 78

Muldoon, Kelly P.
Low power switching for antenna reconfiguration – 27

Myers, Andrew William
Nanoparticles modified with multiple organic acids – 12

Narayanan, Sekharipuram R.
Water free proton conducting membranes based on poly-4-vinylpyridinebisulfate for fuel cells – 57

Narducci, Robert P.
System and method for improved rotor tip performance – 3

Nathal, Michael V.
Low Density, High Creep Resistant Single Crystal Super Alloy for Turbine Airfoils – 19

Low density, high creep resistant single crystal superalloy for turbine airfoils – 19

Neumeier, Yedidia
Stagnation point reverse flow combustor for a combustion system – 42

Nguyen, Hung
Apparatus and Method for Packaging and Integrating Microphotonic Devices – 41

Nguyen, Lillian
Data compression using Chebyshev transform – 66

Nguyen, Quang-Viet
Method and system for fiber optic determination of gas concentrations in liquid receptacles – 10

Ning, Cun-Zheng
Conversion of type of quantum well structure – 34

Conversion of Type of Quantum Well Structure – 37

Nishida, Toshikazu
Electromechanical acoustic liner – 32

Nixon, Robert
Single substrate camera device with CMOS image sensor – 48

Nordin, Gregory P.
MEMS micro-translation device with improved linear travel capability – 29

Oglesby, Donald M.
Oxidation-reduction catalyst and its process of use – 18

Stabilized tin-oxide-based oxidation/reduction catalysts – 18

Olczak, Eugene
Optical nulling apparatus and method for testing an optical surface – 76

O'Neill, Kevin
Sample mounts for microcrystal crystallography – 77

Ormsby, Rachel A.
Apparatus and method for centrifugation and robotic manipulation of samples – 61

Pain, Bedabrata
Increasing the dynamic range of CMOS photodiode imagers – 31

Palmer, Randal T.
Atomizer for thermal management system – 54

Palmer, Randall
Actuated atomizer – 43

Park, Yeonjoon
Ferroelectric Light Control Device – 40

Method and system for sensing and identifying foreign particles in a gaseous environment – 47

Silicon germanium semiconductive alloy and method of fabricating same – 20

Parker, Clayton R.
Apparatus for enhancing tissue repair in mammals – 61

Parker, Michael S.
Spectrometer system for optical reflectance measurements – 73

Parrish, Clyde F.
Process for Self-Repair of Insulation Material – 14

Process for self-repair of insulation material – 22

Parrott, Tony L.
Low-noise fan exit guide vanes – 5

Paulsen, Jason A.
Cobalt ferrite based magnetostrictive materials for magnetic stress sensor and actuator applications – 20

Payton, Lewis N.
Friction stir weld tools – 53

Friction Stir Weld Tools – 54

Peay, Chris S.
Multiple internal seal right micro-electro-mechanical system vacuum package – 34

Penanen, Konstantin I.
Subranging scheme for SQUID sensors – 38

Penar, Paul L.
Whole-body mathematical model for simulating intracranial pressure dynamics – 60

Penner, Ronald K.
Self-advancing step-tap tool – 54

Perotti, Jose
Wireless Instrumentation System and Power Management Scheme Therefore – 36

Perry, Joseph W
Two-photon or higher-order absorbing optical materials for generation of reactive species – 74

Peters, Richard Alan, II
Architecture for Multiple Interacting Robot Intelligences – 68

Petersen, Daniel D.
Solid freeform fabrication apparatus and methods – 80

Petricevic, Vladimir
Cr.sup.4+-doped mixed alloy laser materials and lasers and methods using the materials – 49

Pettit, Donald R.
Self-advancing step-tap tool – 54

Pfeiffer, Ullrich R.
Apparatus and methods for packaging integrated circuit chips with antenna modules providing closed electromagnetic environment for integrated antennas – 40

Phillipps, Patrick G.
Spectrometer system for optical reflectance measurements – 73

Pingree, Liam S. C.
Methods and apparatus of spatially resolved electroluminescence of operating organic light-emitting diodes using conductive atomic force microscopy – 37

Pollara, Fabrizio
Serial turbo trellis coded modulation using a serially concatenated coder – 66

Ponce, Adrian
Method bacterial endospore quantification using lanthanide dipicolinate luminescence – 59

Poudel, Bed
Methods for synthesis of semiconductor nanocrystals and thermoelectric compositions – 78

Powell, Steven P.
Real-time software receiver – 25

Prokopuk, Nicholas
Fabrication of nano-gap electrode arrays by the construction and selective chemical etching of nano-crosswire stacks – 41

Psiaki, Mark L.
Real-time software receiver – 25

Pulley, John K.
Composite shell spacecraft seat – 63

Quinn, Jacqueline
Removal of PCB and Other Halogenated Organic Contaminants found in Ex Situ Structures – 17

Removal of PCB and other halogenated organic contaminants found in ex situ structures – 58

Rai, Man Mohan
Hybrid neural network and support vector machine method for optimization – 67

Rana, Mauro
System and method for determining gas optical density changes in a non-linear measurement regime – 71

Raney, Michael C.
Image and information management system – 80

Reinersman, Phillip N.
Method and program product for determining a radiance field in an optical environment – 75

Ren, Zhifeng
Methods for synthesis of semiconductor nanocrystals and thermoelectric compositions – 78

Reyes, George F.
Holographic memory using beam steering – 45

Ring, Andrew P.
Cobalt ferrite based magnetostrictive materials for magnetic stress sensor and actuator applications – 20

Robertson, Tina L.
Image and information management system – 80

Roder, Russell
Nonsurvivable momentum exchange system – 1

Sachse, Glen W.
System and method for determining gas optical density changes in a non-linear measurement regime – 71

Sacks, Richard D.
Thermal modulation for gas chromatography – 35

Salvino, Liming W.
System and method of analyzing vibrations and identifying failure signatures in the vibrations – 55

Samimy, Mohammad
Localized arc filament plasma actuators for noise mitigation and mixing enhancement – 43

Sarehraz, Mohammad
Dual-polarized feed antenna apparatus and method of use – 28

Schlegel, Todd T.
System for the diagnosis and monitoring of coronary artery disease, acute coronary syndromes, cardiomyopathy and other cardiac conditions – 63

Schryer, David R.
Catalyst for treatment and control of post-combustion emissions – 11

Stabilized tin-oxide-based oxidation/reduction catalysts – 18

Schryer, Jacqueline L.
Oxidation-reduction catalyst and its process of use – 18

Stabilized tin-oxide-based oxidation/reduction catalysts – 18

Schuet, Stefan R.
High speed three-dimensional laser scanner with real time processing – 50

Schultz, Marc R.
Active multistable twisting device – 56

Seagrave, Gordon G.
Data compression using Chebyshev transform – 66

Seal, Michael R.
Method and system for spatially variable rate application of agricultural chemicals based on remotely sensed vegetation data – 57

Seitzman, Jerry M.
Stagnation point reverse flow combustor for a combustion system – 42

Serio, Michael A.
Pyrolysis process for producing fuel gas – 63

Pyrolysis processing for solid waste resource recovery – 16

Sexton, Daniel White
Short range RF communication for jet engine control – 6

Shams, Qamar A.
System and method for monitoring piezoelectric material performance – 78

Sharer, Peter J.
Method for deploying multiple spacecraft – 7

Shcheglov, Kirill V.
Integral resonator gyroscope – 24

Multiple internal seal right micro-electro-mechanical system vacuum package – 34

Shedlock, Daniel
Radiography by selective detection of scatter field velocity components – 45

Sheplak, Mark
Electromechanical acoustic liner – 32

Sheridan, David C.
Graded junction termination extensions for electronic devices – 32

Shimabukuro, Fred
Method and apparatus for low-loss signal transmission – 27

Shulthise, Leo A.
Apparatus and method for centrifugation and robotic manipulation of samples – 61

Siegel, Peter
Method and apparatus for low-loss signal transmission – 27

Silver, Joel A.
Near re-entrant dense pattern optical multipass cell – 70

Simon, Xavier D.
Composite shell spacecraft seat – 63

Simons, Rainee N
Hand held device for wireless powering and interrogation of biomems sensors and actuators – 52

Singhal, Amit
Method of making fine lithium iron phosphate/carbon-based powders with an olivine type structure – 58

Skandan, Ganesh
Method of making fine lithium iron phosphate/carbon-based powders with an olivine type structure – 58

Skoch, Gary J.
Devices and methods of operation thereof for providing stable flow for centrifugal compressors – 24

Smialek, James L.
Low Density, High Creep Resistant Single Crystal Super Alloy for Turbine Airfoils – 19

Smialek, James L
Low density, high creep resistant single crystal superalloy for turbine airfoils – 19

Smith, Bryan Matthew
Nanoparticles modified with multiple organic acids – 12

Smith, Dennis A.
Distributed solid state programmable thermostat/power controller – 38

Smith, Trent M.
Approach for achieving flame retardancy while retaining physical properties in a compatible polymer matrix – 11

Smits, Jan M.
Carbon nanotube-based sensor and method for detection of crack growth in a structure – 35

Snyder, John E.
Cobalt ferrite based magnetostrictive materials for magnetic stress sensor and actuator applications – 20

Soller, Babs R.
Spectrometer system for optical reflectance measurements – 73

Son, Kyung-Ah
Fabrication of nano-gap electrode arrays by the construction and selective chemical etching of nano-crosswire stacks – 41

Sparks, Lawrence
Generating high precision ionospheric ground-truth measurements – 27

Spexarth, Gary R.
System and method of designing a load bearing layer of an inflatable vessel – 65

Stefanakos, Elias
Dual-polarized feed antenna apparatus and method of use – 28

Stevens, Mark A.
Devices and methods of operation thereof for providing stable flow for centrifugal compressors – 24

Stevens, Scott A.
Whole-body mathematical model for simulating intracranial pressure dynamics – 60

Stewart, David A.
Toughened uni-piece, fibrous, reinforced, oxidization-resistant composite – 14

Stewart, Kristine
Thermal modulation for gas chromatography – 35

Storms, Bruce L.
Dividers for reduction of aerodynamic drag of vehicles with open cavities – 4

Stum, Zachary
Sample mounts for microcrystal crystallography – 77

Su, Ji
Carbon nanotube reinforced porous carbon having three-dimensionally ordered porosity and method of fabricating same – 22

Hybrid eletromechanical actuator and actuation system – 40

Sullivan, Thomas A.
Method for nanoencapsulation of aerogels and nanoencapsulated aerogels produced by such method – 13

Summers, Jerry C.
Stabilized tin-oxide-based oxidation/reduction catalysts – 18

Sun, Ya-Ping
Process for separating metallic from semiconducting single-walled carbon nanotubes – 22

Suuberg, Eric M.
Pyrolysis process for producing fuel gas – 63

Pyrolysis processing for solid waste resource recovery – 16

Sztul, Henry
Methods and systems for detection of ice formation on surfaces – 2

Tabanpour, Menachem E.
Struvite crystallization – 60

Tabatabaie-Raissi, Ali
Catalytic dehydrogenation of amine borane complexes – 17

Tai, Yu-Chong
Pyrolyzed-parylene based sensors and method of manufacture – 16

Talukder, Ashit
Computer-implemented system and method for automated and highly accurate plaque analysis, reporting, and visualization – 62

Tam, Anna
Crescentic ramp turbine stage – 5

Taminger, Karen M.
Solid freeform fabrication apparatus and methods – 80

Tang, Tony K.
Cloverleaf microgyroscope with electrostatic alignment and tuning – 52

Tarkanian, Ryan Jeffrey
Ceramic fiber insulation impregnated with an infra-red retardant coating and method for production thereof – 12

Taylor, Bryant D.
Wireless fluid level measuring system – 44

Taylor, Jesse W.
Fischer-tropsch catalysts – 18

Thomas, Nathan A.
Apparatus and method for centrifugation and robotic manipulation of samples – 61

Thorne, Robert E.
Sample mounts for microcrystal crystallography – 77

Thorpe, Jeremy C.
ARA type protograph codes – 64

Tilton, Charles L.
Atomizer for thermal management system – 54

Tilton, Charles
Actuated atomizer – 43

Totman, Peter D.
Method and apparatus for detecting and determining event characteristics with reduced data collection – 30

Tour, James M.
Process for attaching molecular wires and devices to carbon nanotubes and compositions thereof – 41

Process for derivatizing carbon nanotubes with diazonium species – 15

Process for making polymers comprising derivatized carbon nanotubes and compositions thereof – 21

Tranmer, Bruce I.
Whole-body mathematical model for simulating intracranial pressure dynamics – 60

Tsapatsis, Michael
Crystalline Membranes – 17

Tuma, Margaret
Mechanisms and methods for selective wavelength filtering – 75

Ueno, Toshiaki
Method and apparatus to assess compartment syndrome – 62

Upchurch, Billy T.
Catalyst for treatment and control of post-combustion emissions – 11

Upchurch, legal representative, Wilhelmina H.
Catalyst for treatment and control of post-combustion emissions – 11

Van Buskirk, Paul D.
Gas volume contents within a container, smart volume instrument – 69

Vasquez, Arturo
Water outlet control mechanism for fuel cell system operation in variable gravity environments – 9

Vatan, Farrokh
System for solving diagnosis and hitting set problems – 68

Vellinger, John C.
Apparatus and method for centrifugation and robotic manipulation of samples – 61

Venkateswaran, Kasthuri J.
Bacillus pumilus SAFR-032 isolate – 59

Method bacterial endospore quantification using lanthanide dipicolinate luminescence – 59

Venkateswaran, Kasthuri
Bacillus odysseyi isolate – 60

Viswanathan, Tito
Corrosion prevention of cold rolled steel using water dispersible lignosulfonic acid doped polyaniline – 16

Corrosion Prevention of Cold Rolled Steel Using Water Dispersible Lignosulfonic Acid Doped Polyaniline – 19

Volponi, Allan J.
Bootstrap data methodology for sequential hybrid model building – 5

Vranish, John M.
Screw-locking wrench – 52

Thrust rollers – 50

Waite, J. Hunter
Thermal modulation for gas chromatography – 35

Wang, Wenzhong
Methods for synthesis of semiconductor nanocrystals and thermoelectric compositions – 78

Wang, Wubao
Methods and systems for detection of ice formation on surfaces – 2

Watkins, Anthony N.
Carbon nanotube-based sensor and method for detection of crack growth in a structure – 35

Watkins, Anthony Neal
Oxidation-reduction catalyst and its process of use – 18

Stabilized tin-oxide-based oxidation/reduction catalysts – 18

Watson, J. Kevin
Solid freeform fabrication apparatus and methods – 80

Weiler, Jeff
Actuated atomizer – 43

Atomizer for thermal management system – 54

Weiss, Peter
Elastomeric actuator devices for magnetic resonance imaging – 48

Weller, Thomas
Dual-polarized feed antenna apparatus and method of use – 28

White, James H.
Fischer-tropsch catalysts – 18

Wiberg, Dean V.
Integral resonator gyroscope – 24

Multiple internal seal right micro-electromechanical system vacuum package – 34

Wickline, Richard
Detection and enforcement of failure-to-yield in an emergency vehicle preemption system – 23

Wiesen, Bernard
Supercharged two-cycle engines employing novel single element reciprocating shuttle inlet valve mechanisms and with a variable compression ratio – 55

Williams, Benjamin S.
Terahertz lasers and amplifiers based on resonant optical phonon scattering to achieve population inversion – 73

Williams, Brian
Method of making carbon fiber-carbon matrix reinforced ceramic composites – 12

Williams, John R.
Graded junction termination extensions for electronic devices – 32

Williams, Martha K.
Approach for achieving flame retardancy while retaining physical properties in a compatible polymer matrix – 11

Williams, Phillip A.
Carbon nanotube-based sensor and method for detection of crack growth in a structure – 35

Wilson, Carolina
Nanoparticles modified with multiple organic acids – 12

Wincheski, Russell A.
Carbon nanotube-based sensor and method for detection of crack growth in a structure – 35

Wingert, Andreas
Elastomeric actuator devices for magnetic resonance imaging – 48

Winkelmann, Joseph P.
Network device interface for digitally interfacing data channels to a controller via a network – 66

Wojtowicz, Marek A.
Pyrolysis process for producing fuel gas – 63

Pyrolysis processing for solid waste resource recovery – 16

Woodard, Stanley E.
Wireless fluid level measuring system – 44

Wu, Jianfeng
2-.mu.m fiber amplified spontaneous emission (ASE) source – 71

Wyman, Jr., William F.
Integrated inertial stellar attitude sensor – 9

Xu, Jennifer C.
Miniaturized metal (metal alloy)/PdO.sub.x/SiC hydrogen and hydrocarbon gas sensors – 20

Miniaturized Metal (Metal Alloy)/PdO(x)/SiC Hydrogen and Hydrocarbon Gas Sensors – 42

Xu, Tian-Bing
Hybrid eletromechanical actuator and actuation system – 40

Yadid-Pecht, Orly
Image sensor with high dynamic range linear output – 74

Yagoobi, Jamal Seyed
Electrode design for electrohydrodynamic conduction pumping – 33

Yang, Jiping
Process for attaching molecular wires and devices to carbon nanotubes and compositions thereof – 41

Process for derivatizing carbon nanotubes with diazonium species – 15

Process for making polymers comprising derivatized carbon nanotubes and compositions thereof – 21

Yang, Rui Q.
Interband cascade detectors – 79

Yao, Kung
ARA type protograph codes – 64

Yee, Karl Y.
Integral resonator gyroscope – 24

Multiple internal seal right micro-electro-mechanical system vacuum package – 34

Yeh, Cavour

Method and apparatus for low-loss signal transmission – 27

Yen, Shiao-Pin S.

Water free proton conducting membranes based on poly-4-vinylpyridinebisulfate for fuel cells – 57

Yorktown, Ji Su
Carbon Nanotube Reinforced Porous Carbon Having Three-Dimensionally Ordered Porosity and Method of Fabricating Same – 13

Yost, William T.
Method and apparatus to assess compartment syndrome – 62

Zahler, James M.
Wafer bonded epitaxial templates for silicon heterostructures – 77

Wafer bonded virtual substrate and method for forming the same – 31

Zhou, Hanying
Holographic memory using beam steering – 45

Zhu, Dongming
Low conductivity and sintering-resistant thermal barrier coatings – 53

Zientek, Thomas A.
System and method for improved rotor tip performance – 3

Zinn, Alfred A.
Ceramic fiber insulation impregnated with an infra-red retardant coating and method for production thereof – 12

Zinn, Ben T.
Stagnation point reverse flow combustor for a combustion system – 42

Zorman, Christian A.
Silicon carbide and other films and method of deposition – 21

Public Availability of Copies of Patents

Copies of U.S. patents may be purchased directly from the U.S. Patent and Trademark Office, Washington, D.C. 20231 at $3.00 per copy. When ordering patents, the U.S. Patent Number should be used, and payment must be remitted in advance, preferably by money order or check payable to the Commissioner of Patents and Trademarks. Prepaid purchase coupons for ordering are also available from the Patent and Trademark Office.

Copies of U.S. patents may also be purchased online from the U.S. Patent and Trademark Office at http://www.uspto.gov. Patents also may be viewed online free of charge at the Web site.

Licenses for Commercial Use: Inquiries and Applications for License

NASA inventions abstracted in this bibliography are generally available for nonexclusive or exclusive licensing in accordance with the Department of Commerce Patent License Regulations (37 CFR Part 404). However, the availability for licensing of individual inventions may have changed since the publication of this bibliography. Applications for licensing NASA patents must be submitted in writing to the Patent Counsel of the NASA installation having cognizance of the specific invention. All NASA patent licenses shall be by express written instruments executed by the NASA General Counsel.

Inquiries concerning the NASA Patent Licensing Program or the availability of licenses for the commercial use of NASA-owned inventions covered by U.S. patents or pending applications for patent should be forwarded to the NASA Patent Counsel of the NASA installation having cognizance of the specific invention, or the Associate General Counsel for Intellectual Property, Commercial and International Law, National Aeronautics and Space Administration, Washington, D.C. 20546. Inquiries should refer to the NASA Case Number, the Title of the Invention, and the U.S. Patent Number assigned to the invention as shown in this bibliography. Patent applications available for licensing are periodically advertised in the Federal Register.

The NASA Patent Counsel having cognizance of the invention is determined by the first three letters or prefix of the NASA Case Number assigned to the invention. The addresses and contact numbers for NASA Patent Counsels are listed alongside the NASA Case Number prefix letters as follows:

Center Patent Counsels

HQN-xxxxx **NASA Headquarters**
Agency Counsel for Intellectual Property
Office of the General Counsel
Suite 9T39
300 E Street SW
Washington, DC 20546-0001
Phone: 202-358-2040
Fax: 202-358-4341

ARC-xxxxx **Ames Research Center**
Mail Code 202A-4
Moffett Field, CA 94035
Phone: 650-604-0887
Fax: 650-604-2767

DRC-xxxxx **Dryden Flight Research Center**
PO Box 273, Mail Stop 4839
Edwards, CA 93523-0273
No assigned Patent Counsel; services provided by NASA Management Office

LEW-xxxxx **Glenn Research Center at Lewis Field**
Mail Code 500-118
21000 Brookpark Rd
Cleveland, OH 44135-3191
Phone: 216-433-5756
Fax: 216-433-6790

GSC-xxxxx **Goddard Space Flight Center**
Mail Code 140.1
Greenbelt, MD 20771-0001
Phone: 301-286-7351
Fax: 301-286-9502

MSC-xxxxx **Lyndon B. Johnson Space Center**
Mail Code AL
2101 NASA Parkway
Houston, TX 77058-3607
Phone: 281-483-1003
Fax: 281-483-6936

KSC-xxxxx **John F. Kennedy Space Center**
Mail Code CC-A
Kennedy Space Center, FL 32899-0001
Phone: 321-867-3058
Fax: 321-867-1817

LAR-xxxxx **Langley Research Center**
Mail Code 141
Hampton, VA 23681-2199
Phone: 757-864-3221
Fax: 757-864-9190

MFS-xxxxx **George C. Marshall Space Flight Center**
Mail Code LS01
Marshall Space Flight Center, AL 35812-0001
Phone: 256-544-0013
Fax: 256-544-0258

NPO-xxxxx **NASA Management Office**
Patent Counsel
Mail Code 180-200
4800 Oak Grove Dr
Pasadena, CA 91109
Phone: 818-354-7770
Fax: 818-393-3160

SSC-xxxxx **John C. Stennis Space Center**
Mail Code HA30
Stennis Space Center, MS 39529-6000
No assigned Patent Counsel; services provided by Kennedy Space Center

Report Documentation Page

1. Report No. NASA/SP—2008-7039/SUPPL69	2. Government Accession No.	3. Recipient's Catalog No.
4. Title and Subtitle NASA Patent Abstracts A Continuing Bibliography (Supplement 69)		5. Report Date October 2008 6. Performing Organization Code
7. Author(s)		8. Performing Organization Report No. 10. Work Unit No.
9. Performing Organization Name and Address NASA Scientific and Technical Information Program Office		11. Contract or Grant No.
12. Sponsoring Agency Name and Address National Aeronautics and Space Administration Langley Research Center Hampton, VA 23681		13. Type of Report and Period Covered Special Publication 14. Sponsoring Agency Code
15. Supplementary Notes		

16. Abstract

This report lists NASA patent abstracts announced in the NASA Aeronautics and Space Database over the past 12 months.

17. Key Words (Suggested by Author(s)) Bibliographies Patent Policy NASA Programs	18. Distribution Statement Unclassified - Unlimited Subject Category - 82

19. Security Classif. (of this report) Unclassified	20. Security Classif. (of this page) Unclassified	21. No. of Pages 115	22. Price

For sale by the NASA Center for AeroSpace Information, 7115 Standard Drive, Hanover, MD 21076